2022 Ninja ZX-6R

PARTS DIAGRAM

Taillight(s)

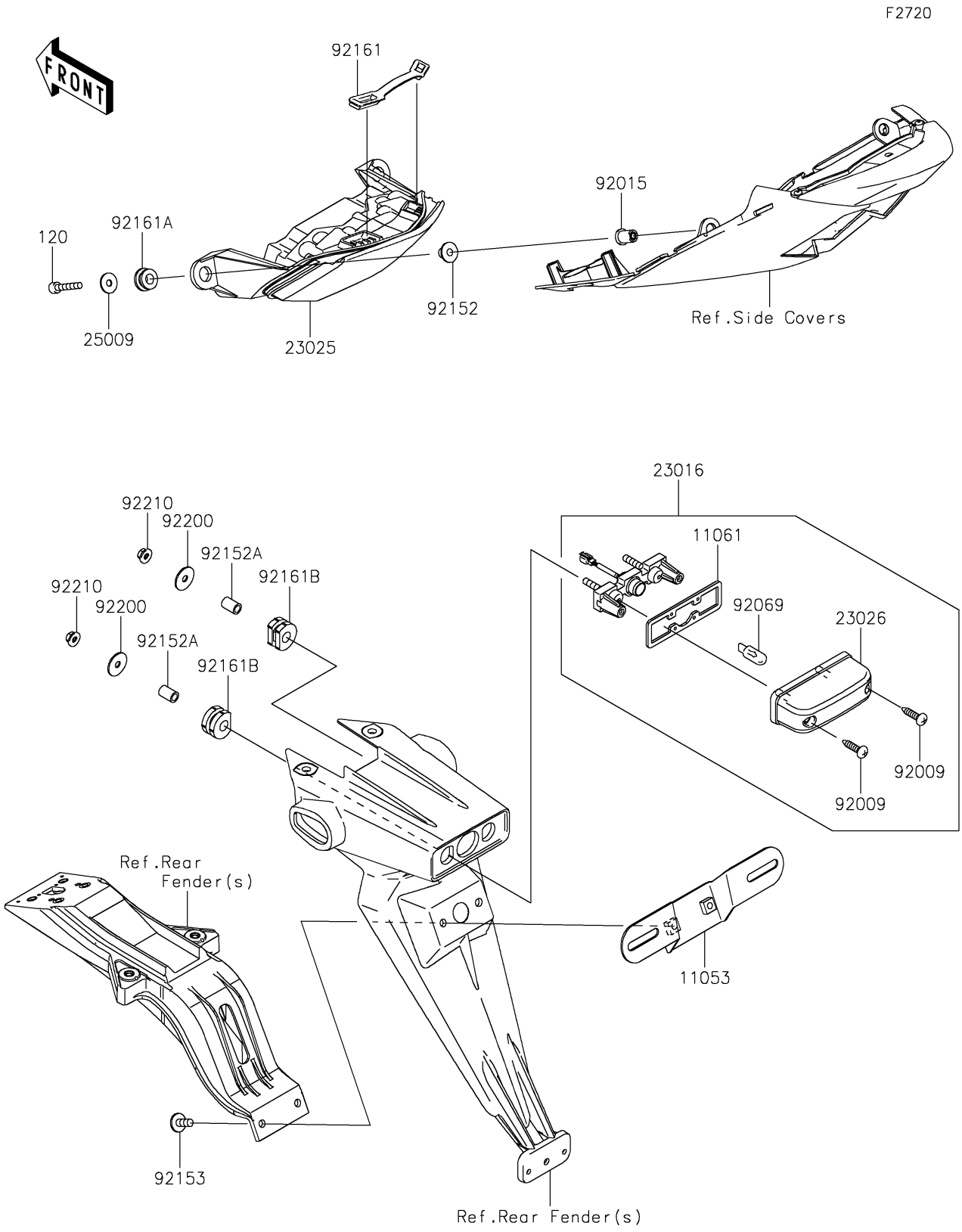

© 2026 Kawasaki Motors Corp., U.S.A.

2022 Ninja ZX-6R

PARTS LIST

Taillight(s)

ITEM NAME	PART NUMBER	QUANTITY
BRACKET,LICENSE (Ref # 11053)	11053-0400	1
GASKET,LICENSE LAMP (Ref # 11061)	11061-0329	1
LAMP-ASSY,LICENSE (Ref # 23016)	23016-0020	1
LAMP-TAIL (Ref # 23025)	23025-0059	1
LENS,LICENSE LAMP (Ref # 23026)	23026-0014	1
WASHER,5.2X16X1.2 (Ref # 25009)	25009-004	2
SCREW,TAPPING,4X16 (Ref # 92009)	92009-1605	2
NUT,WELL,5MM (Ref # 92015)	92015-1757	2
BULB,12V 5W (Ref # 92069)	92069-1016	1
COLLAR (Ref # 92152)	92152-0092	2
COLLAR,6X9X13.3 (Ref # 92152A)	92152-0617	2
BOLT,SOCKET,6X14 (Ref # 92153)	92153-1446	2
DAMPER,TAIL LAMP (Ref # 92161)	92161-0191	1
DAMPER (Ref # 92161A)	92161-0317	2
DAMPER (Ref # 92161B)	92161-0776	2
WASHER,5.5X20X1.2 (Ref # 92200)	92200-0284	2
NUT,FLANGED,5MM (Ref # 92210)	92210-0007	2
BOLT-SOCKET,5X22 (Ref # 120)	120CA0522	2

© 2026 Kawasaki Motors Corp., U.S.A.