2022 Ninja ZX-6R

PARTS DIAGRAM

Brake Pedal/Torque Link

F2260

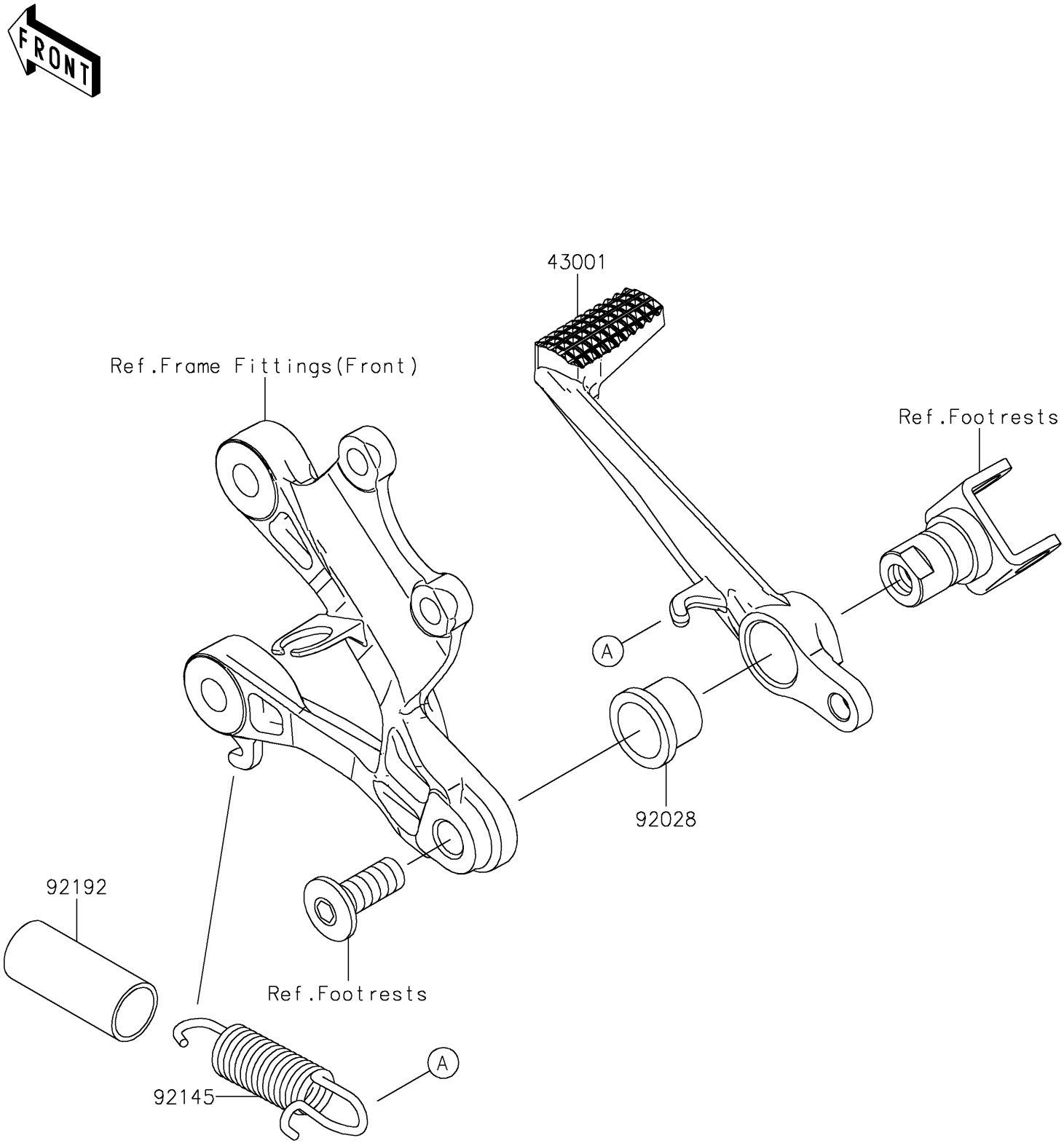

© 2026 Kawasaki Motors Corp., U.S.A.

2022 Ninja ZX-6R

PARTS LIST

Brake Pedal/Torque Link

ITEM NAME	PART NUMBER	QUANTITY
LEVER-BRAKE,PEDAL (Ref # 43001)	43001-0118	1
BUSHING (Ref # 92028)	92028-1576	1
SPRING,BRAKE PEDAL RETURN (Ref # 92145)	92145-0630	1
TUBE,16X19X45 (Ref # 92192)	92192-0838	1

© 2026 Kawasaki Motors Corp., U.S.A.