1997 KX500

PARTS DIAGRAM

Fenders

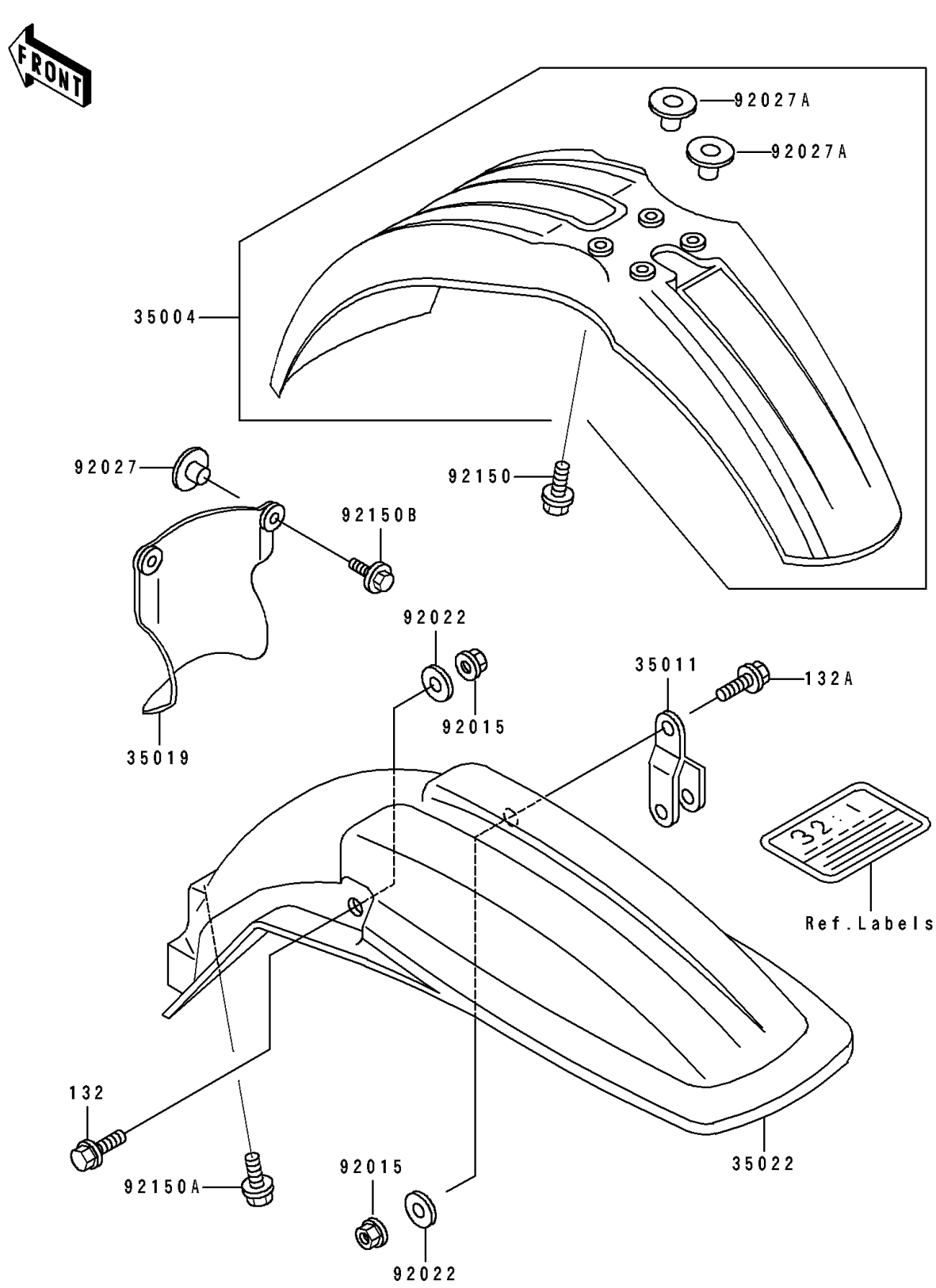

© 2026 Kawasaki Motors Corp., U.S.A.

1997 KX500

PARTS LIST

Fenders

ITEM NAME	PART NUMBER	QUANTITY
FENDER-FRONT,L.GREEN (Ref # 35004)	35004-1318-6W	1
STAY,MUFFLER (Ref # 35011)	35011-1534	1
FLAP,AIR FILTER (Ref # 35019)	35019-1159	1
FENDER-COMP-REAR,L.GREEN (Ref # 35022)	35022-1241-6W	1
NUT,FLANGED,6MM (Ref # 92015)	92015-1078	2
WASHER,6.5X20X1.6 (Ref # 92022)	92022-125	2
COLLAR (Ref # 92027)	92027-1794	2
COLLAR (Ref # 92027A)	92027-1936	4
BOLT,6X20 (Ref # 92150)	92150-1339	4
BOLT,FLANGED,6X30 (Ref # 92150A)	92150-1486	2
BOLT,FLANGED,6X16 (Ref # 92150B)	92150-1506	2
BOLT-FLANGED-SMALL (Ref # 132)	132G0640	1
BOLT-FLANGED-SMALL (Ref # 132A)	132G0645	1

© 2026 Kawasaki Motors Corp., U.S.A.