1989 KX500

PARTS DIAGRAM

Crankshaft/Piston

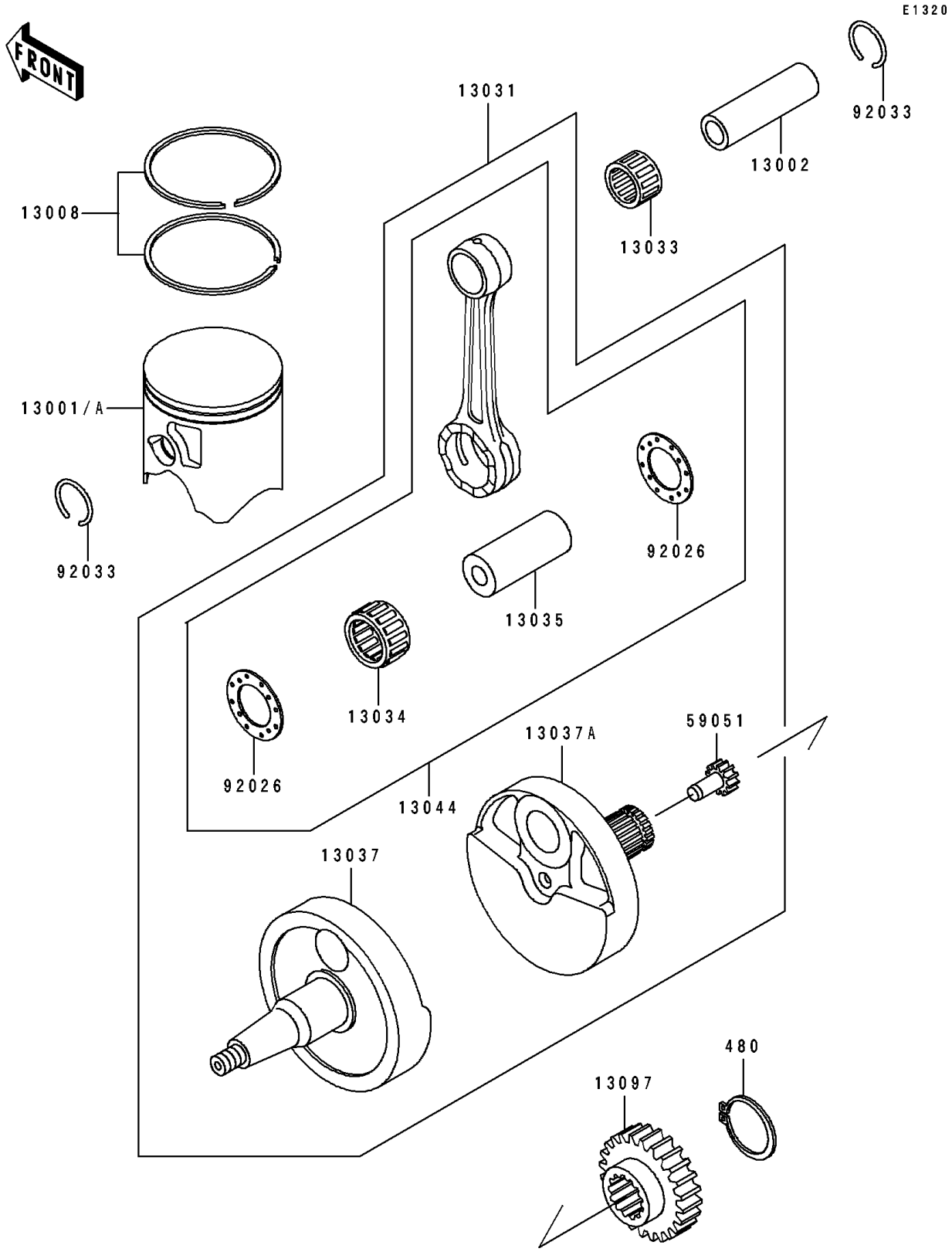

© 2026 Kawasaki Motors Corp., U.S.A.

1989 KX500

PARTS LIST

Crankshaft/Piston

Kawasaki
Let the Good Times Roll®

ITEM NAME	PART NUMBER	QUANTITY

© 2026 Kawasaki Motors Corp., U.S.A.