2020 VERSYS® 1000 SE LT+

PARTS DIAGRAM

Accessory(Low Seat)

F2910C



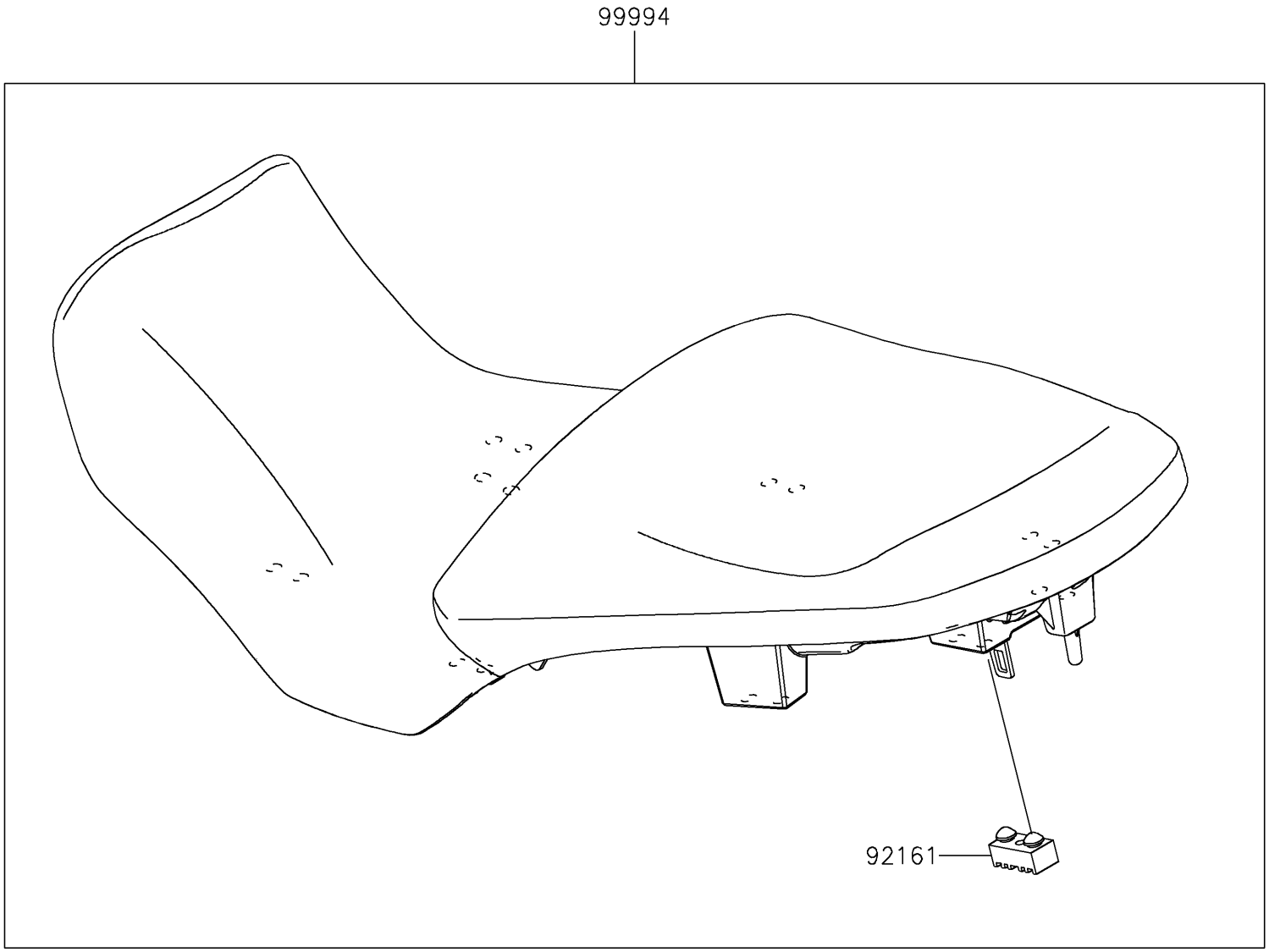

© 2026 Kawasaki Motors Corp., U.S.A.

2020 VERSYS® 1000 SE LT+

PARTS LIST

Accessory(Low Seat)

ITEM NAME	PART NUMBER	QUANTITY
DAMPER,SEAT (Ref # 92161)	92161-0050	9
LOW SEAT (Ref # 99994)	99994-1143	1

© 2026 Kawasaki Motors Corp., U.S.A.