2020 VERSYS® 1000 SE LT+

PARTS DIAGRAM

Seat

F2510



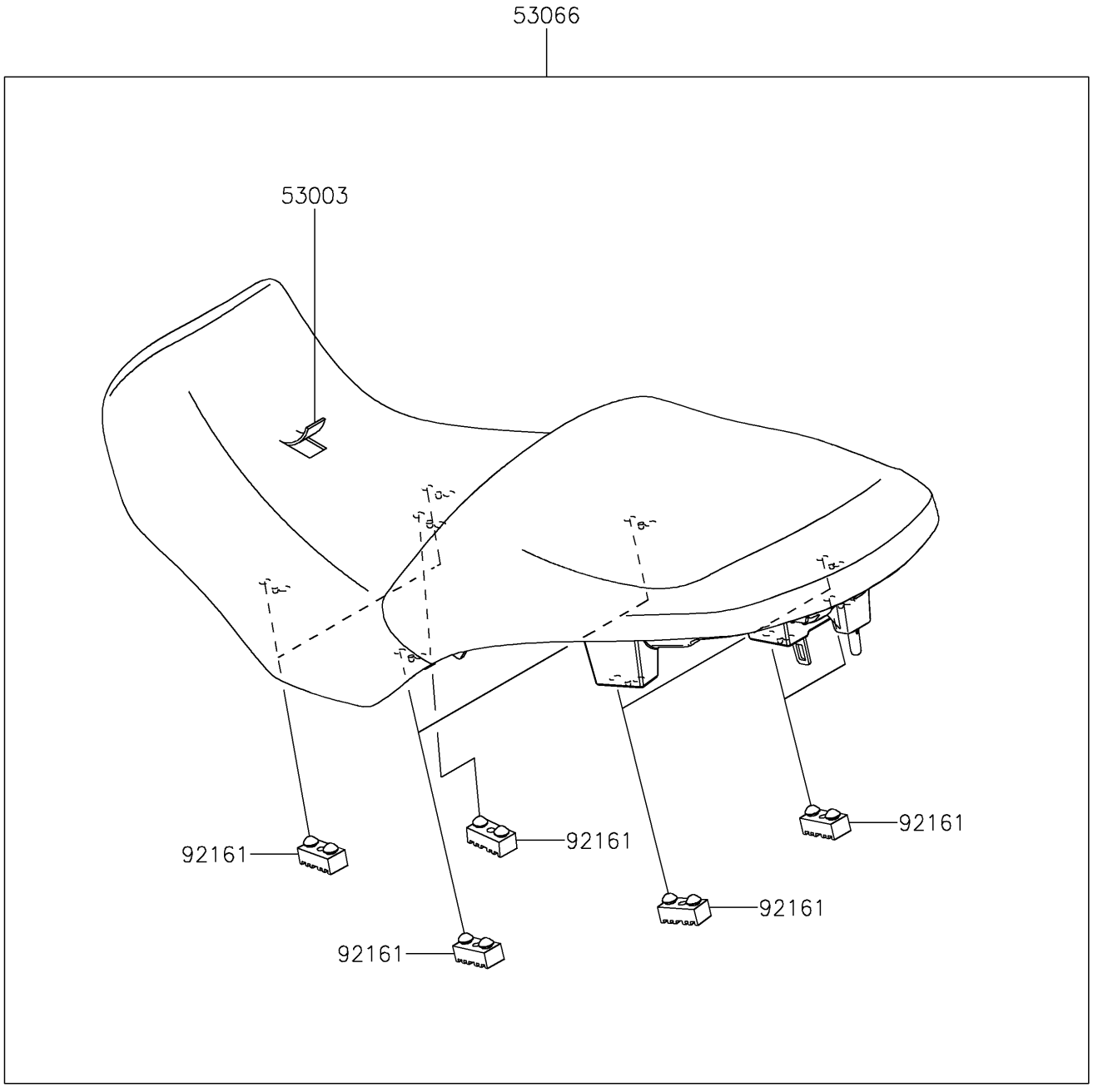

© 2026 Kawasaki Motors Corp., U.S.A.

2020 VERSYS® 1000 SE LT+

PARTS LIST

Seat

ITEM NAME	PART NUMBER	QUANTITY
LEATHER,BLACK (Ref # 53003)	53003-0469-MA	1
SEAT-ASSY,BLACK (Ref # 53066)	53066-0611-MA	1
DAMPER,SEAT (Ref # 92161)	92161-0050	9

© 2026 Kawasaki Motors Corp., U.S.A.