2021 MULE PRO-FXT™

PARTS DIAGRAM

Cylinder Head

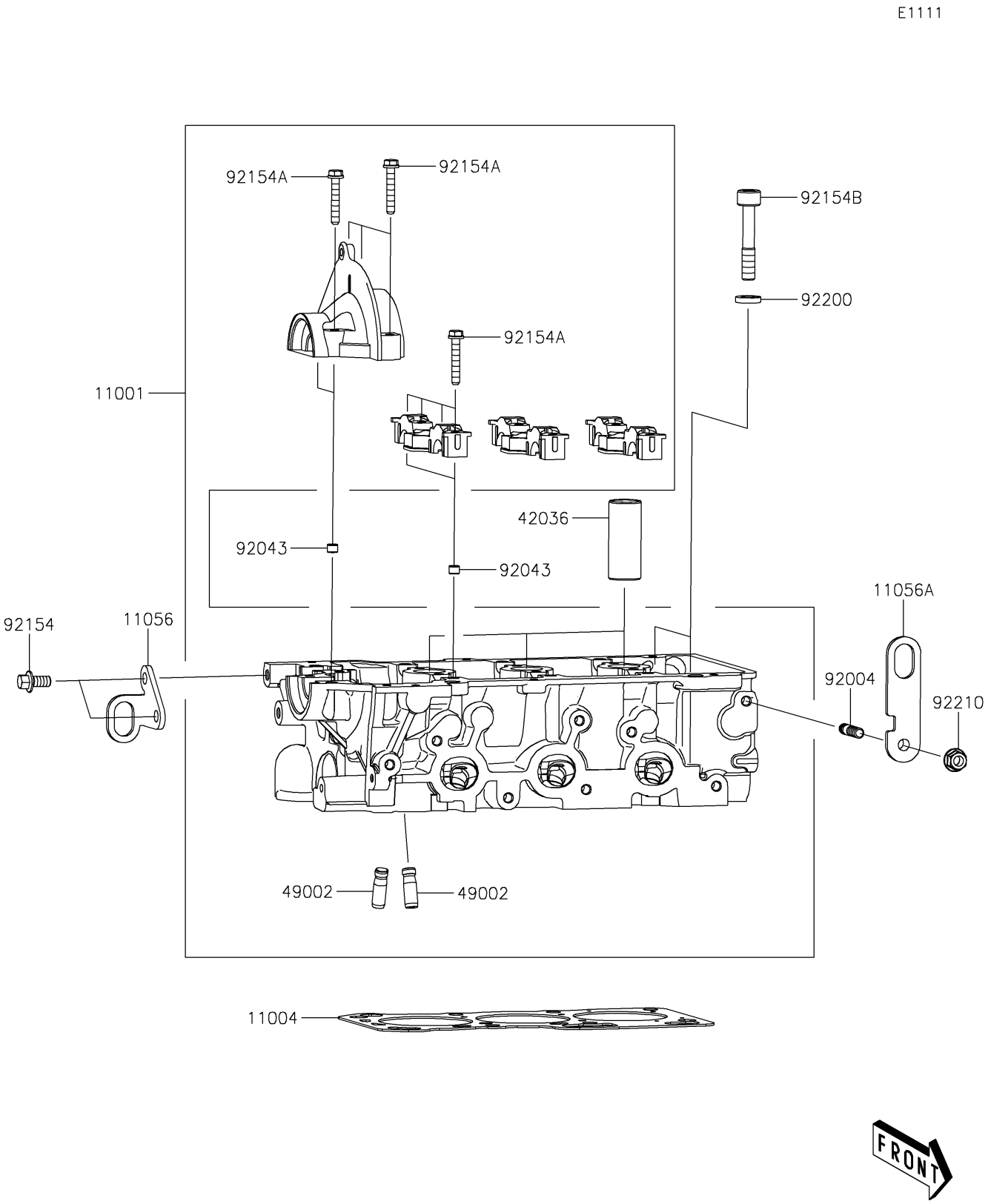

© 2026 Kawasaki Motors Corp., U.S.A.

2021 MULE PRO-FXT™

PARTS LIST

Cylinder Head

ITEM NAME	PART NUMBER	QUANTITY

© 2026 Kawasaki Motors Corp., U.S.A.