2021 MULE PRO-FXT™

PARTS DIAGRAM

Cylinder Head

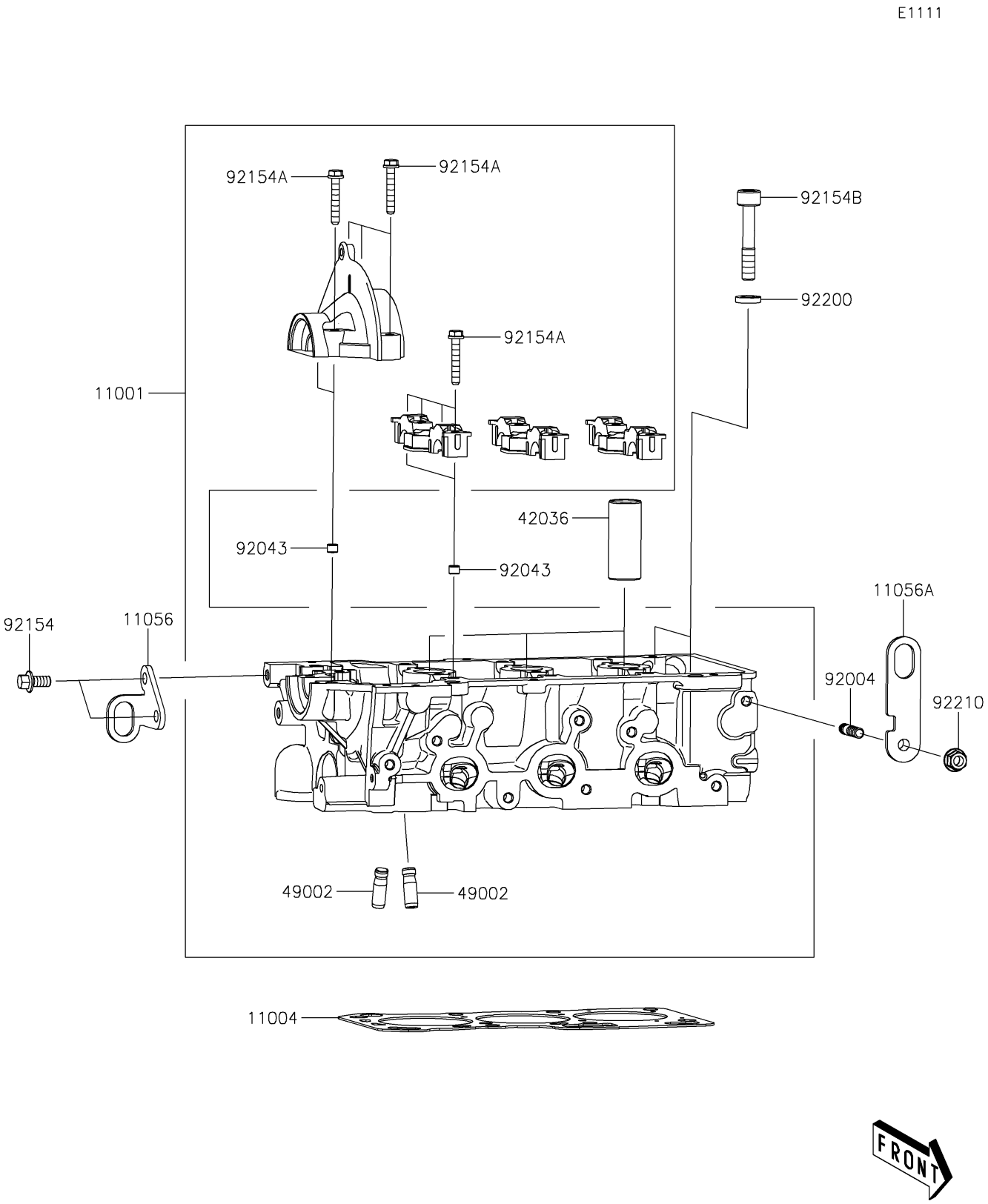

© 2026 Kawasaki Motors Corp., U.S.A.

2021 MULE PRO-FXT™

PARTS LIST

Cylinder Head

ITEM NAME	PART NUMBER	QUANTITY
HEAD-CYLINDER (Ref # 11001)	11001-0839	1
GASKET-HEAD (Ref # 11004)	11004-0747	1
BRACKET (Ref # 11056)	11056-7081	1
BRACKET (Ref # 11056A)	11056-7082	1
SLEEVE,SPARK PLUG (Ref # 42036)	42036-0764	3
GUIDE-VALVE (Ref # 49002)	49002-0030	12
STUD (Ref # 92004)	92004-0734	1
PIN (Ref # 92043)	92043-0831	8
BOLT,FLANGED,8X16 (Ref # 92154)	92154-1588	2
BOLT,6X38 (Ref # 92154A)	92154-1589	17
BOLT,SOCKET (Ref # 92154B)	92154-1590	8
WASHER (Ref # 92200)	92200-1683	8
NUT (Ref # 92210)	92210-0944	1

© 2026 Kawasaki Motors Corp., U.S.A.