# 2021 Ninja® ZX™-10R ABS KRT Edition

## PARTS DIAGRAM

### Fuel Pump

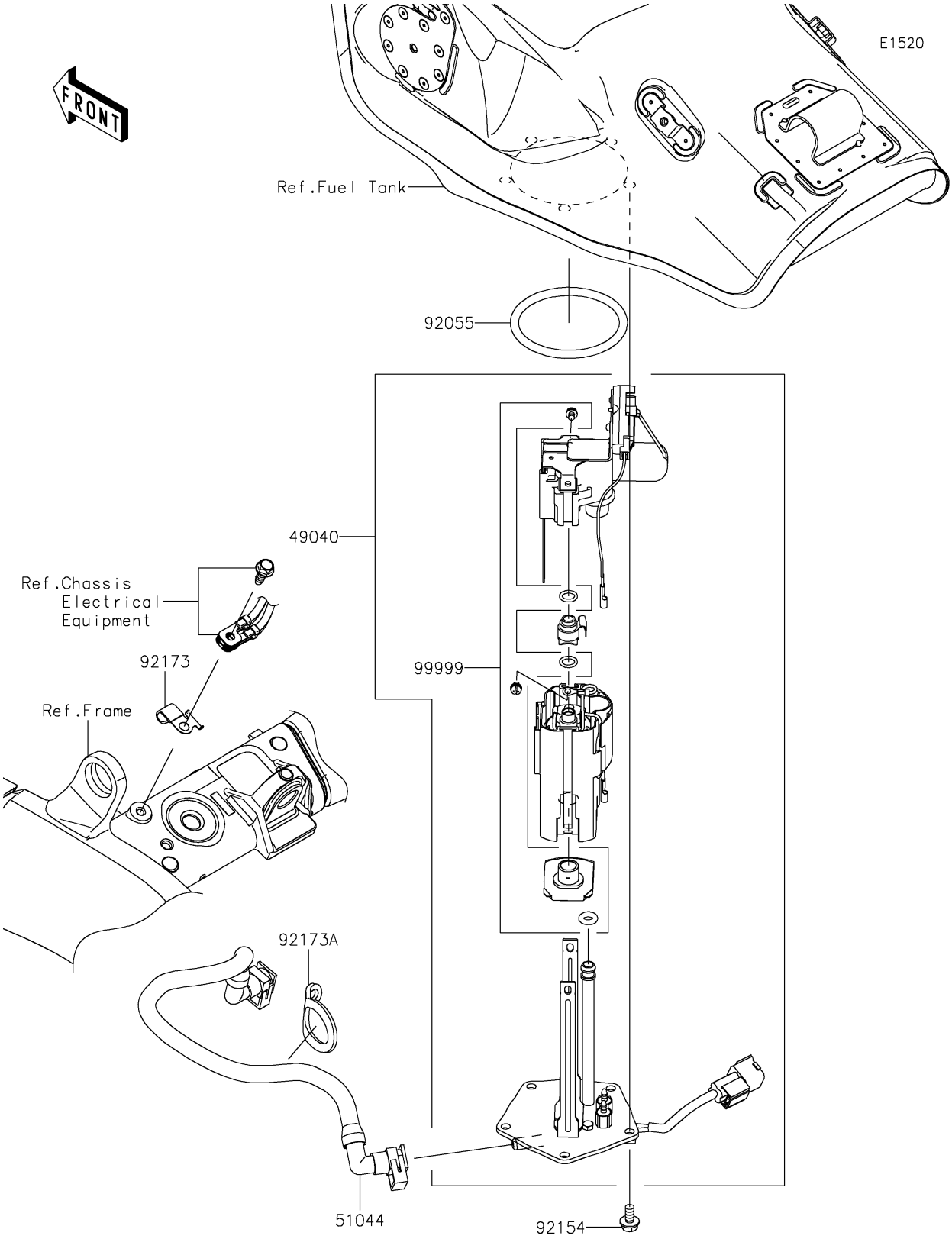


© 2026 Kawasaki Motors Corp., U.S.A.

# 2021 Ninja® ZX™-10R ABS KRT Edition

Kawasaki
Let the Good Times Roll®

## PARTS LIST

### Fuel Pump

| ITEM NAME | PART NUMBER | QUANTITY |
|---|---|---|
| PUMP-FUEL (Ref # 49040) | 49040-0798 | 1 |
| TUBE-ASSY,FUEL (Ref # 51044) | 51044-0858 | 1 |
| RING-O,70.6X5.7 (Ref # 92055) | 92055-0210 | 1 |
| BOLT,FLANGED,6X12 (Ref # 92154) | 92154-1848 | 5 |
| CLAMP (Ref # 92173) | 92173-0831 | 1 |
| CLAMP (Ref # 92173A) | 92173-0832 | 1 |
| KIT,FUEL FILTER (Ref # 99999) | 99999-0521 | 1 |

© 2026 Kawasaki Motors Corp., U.S.A.