2021 Ninja® ZX™-10R ABS KRT Edition

PARTS DIAGRAM

Cylinder Head Cover

E1112

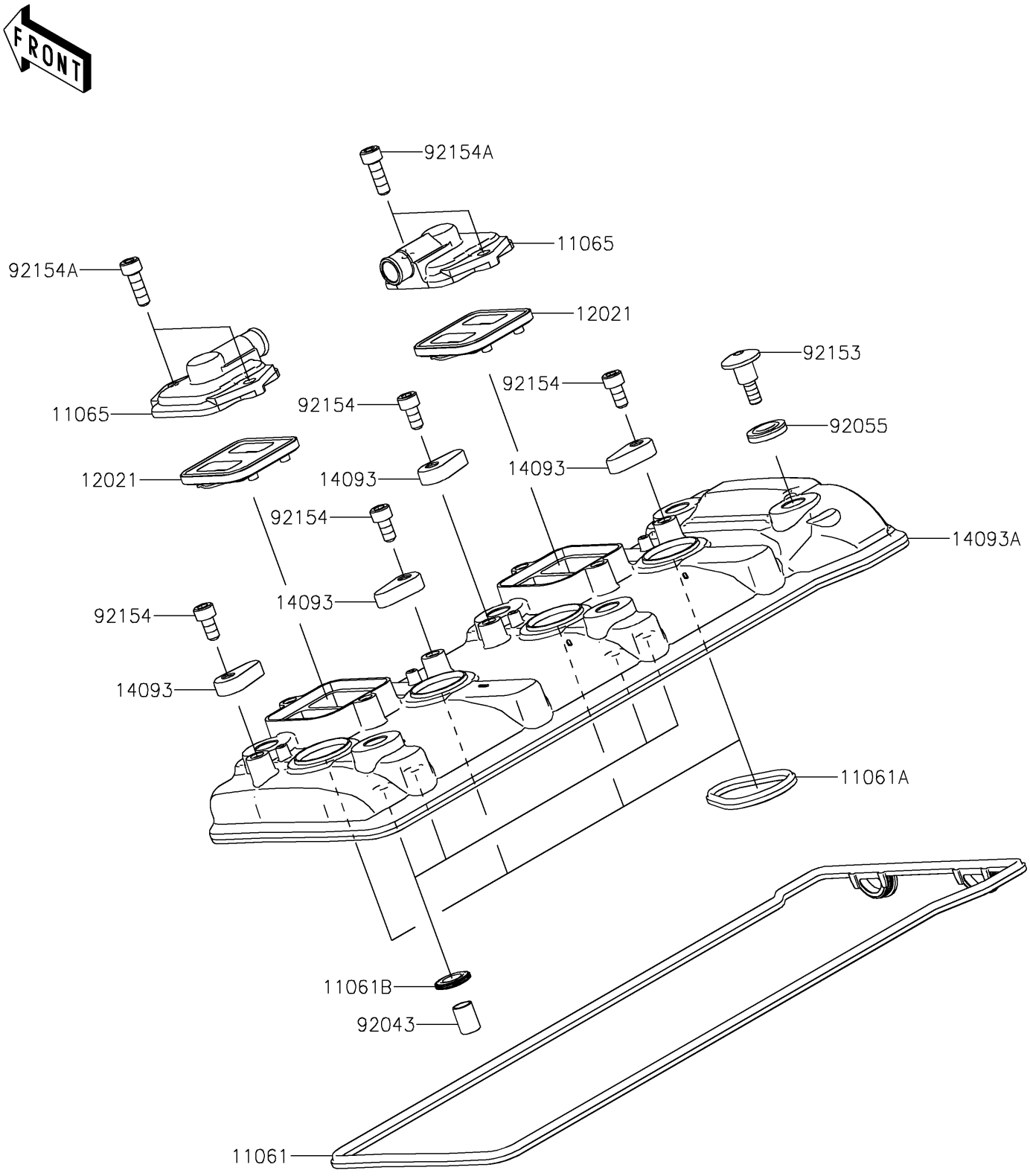

© 2026 Kawasaki Motors Corp., U.S.A.

2021 Ninja® ZX™-10R ABS KRT Edition

Kawasaki
Let the Good Times Roll®

PARTS LIST

Cylinder Head Cover

ITEM NAME	PART NUMBER	QUANTITY
GASKET,HEAD COVER (Ref # 11061)	11061-1290	1
GASKET,PLUG HOLE (Ref # 11061A)	11061-1291	4
GASKET (Ref # 11061B)	11061-1292	4
CAP (Ref # 11065)	11065-0360	2
VALVE-ASSY-REED (Ref # 12021)	12021-0021	2
COVER (Ref # 14093)	14093-0770	4
COVER,HEAD (Ref # 14093A)	14093-1092	1
PIN,DOWEL,10X14 (Ref # 92043)	92043-1037	4
RING-O (Ref # 92055)	92055-0785	6
BOLT,SOCKET,6X22.5 (Ref # 92153)	92153-1779	6
BOLT,SOCKET,6X12 (Ref # 92154)	92154-1820	4
BOLT,SOCKET,6X18 (Ref # 92154A)	92154-1832	4

© 2026 Kawasaki Motors Corp., U.S.A.