2019 W175 SE (Indonesia Only)

PARTS DIAGRAM

Decals(Silver)(AKFA)

F2861D

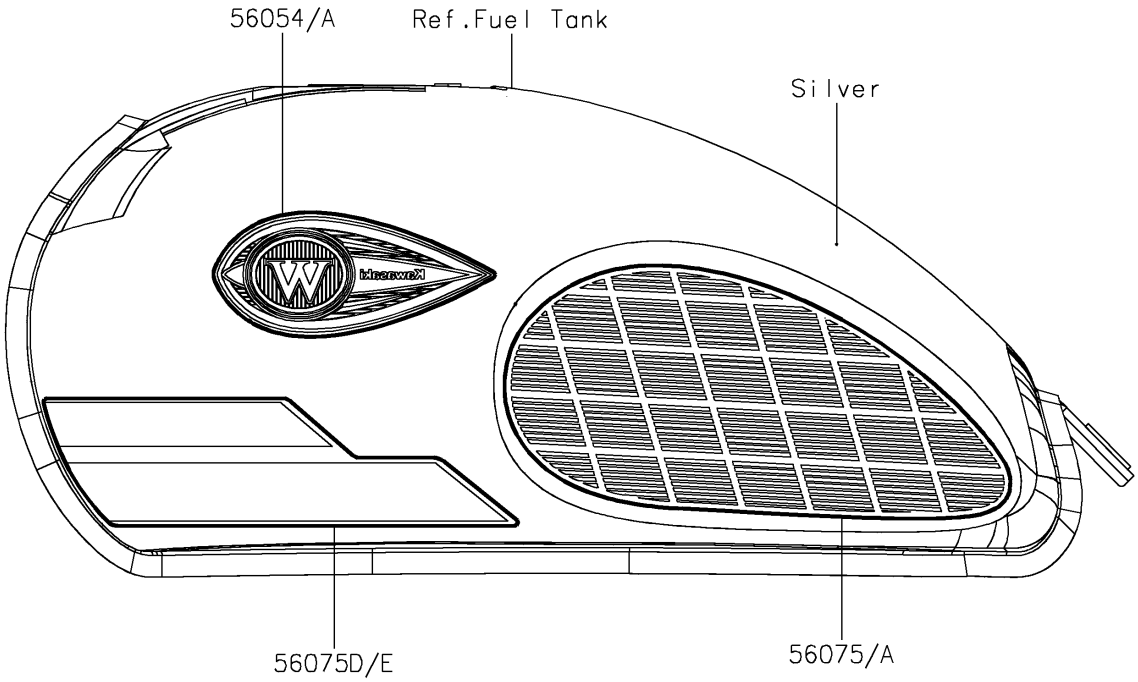

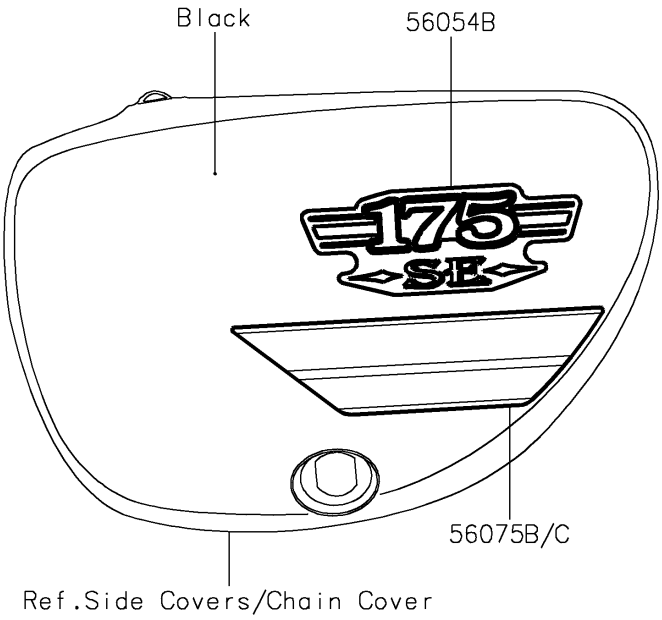

© 2026 Kawasaki Motors Corp., U.S.A.

2019 W175 SE (Indonesia Only)

PARTS LIST

Decals(Silver)(AKFA)

ITEM NAME	PART NUMBER	QUANTITY
MARK,FUEL TANK,LH,W EMBLEM (Ref # 56054)	56054-2371	1
MARK,FUEL TANK,RH,W EMBLEM (Ref # 56054A)	56054-2372	1
MARK,SIDE COVER,175SE (Ref # 56054B)	56054-2554	2
PATTERN,TANK PAD,LH (Ref # 56075)	56075-7802	1
PATTERN,TANK PAD,RH (Ref # 56075A)	56075-7804	1
PATTERN,SIDE COVER,LH (Ref # 56075B)	56075-7807	1
PATTERN,SIDE COVER,RH (Ref # 56075C)	56075-7808	1
PATTERN,FUEL TANK,LH (Ref # 56075D)	56075-7809	1
PATTERN,FUEL TANK,RH (Ref # 56075E)	56075-7810	1

© 2026 Kawasaki Motors Corp., U.S.A.