2019 W175 SE

PARTS DIAGRAM

Owner's Tools

F2810

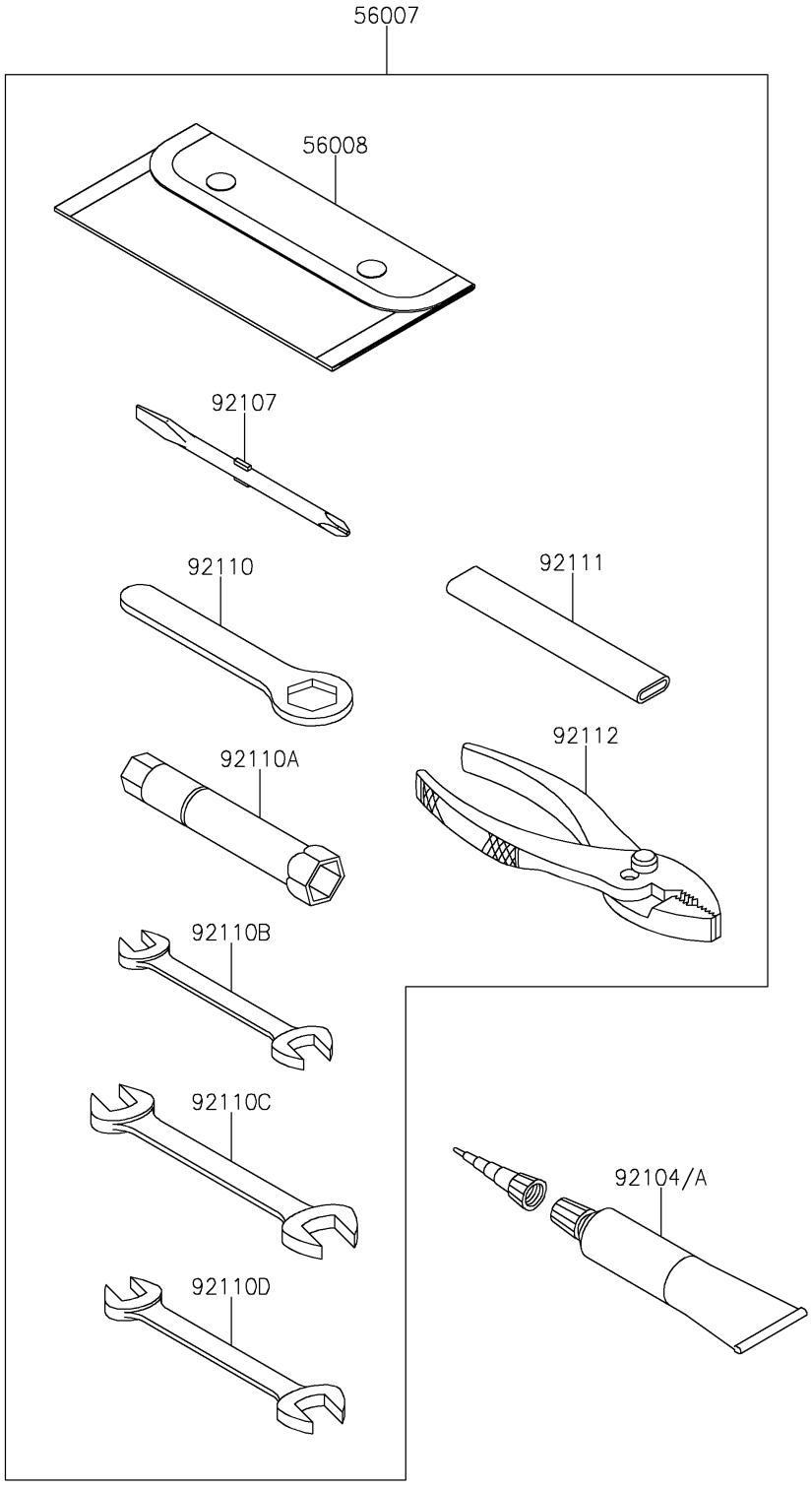

© 2026 Kawasaki Motors Corp., U.S.A.

2019 W175 SE

PARTS LIST

Owner's Tools

ITEM NAME	PART NUMBER	QUANTITY
TOOL-KIT (Ref # 56007)	56007-0155	1
BAG,TOOL (Ref # 56008)	56008-0563	1
GASKET-LIQUID,TB1211F,CLEAR (Ref # 92104)	92104-0004	1
GASKET-LIQUID,TB1216B,BLACK (Ref # 92104A)	92104-1064	1
TOOL-DRIVER,#2PHILLIPS (Ref # 92107)	92107-0023	1
TOOL-WRENCH,BOX END,19MM (Ref # 92110)	92110-0604	1
TOOL-WRENCH,BOX,16MM (Ref # 92110A)	92110-0605	1
TOOL-WRENCH,OPEN END,10X12 (Ref # 92110B)	92110-0606	1
TOOL-WRENCH,OPEN END,14X17 (Ref # 92110C)	92110-0607	1
TOOL-WRENCH,OPEN END,12X14 (Ref # 92110D)	92110-0615	1
TOOL-BAR,WRENCH (Ref # 92111)	92111-0010	1
TOOL-PLIERS (Ref # 92112)	92112-0009	1

© 2026 Kawasaki Motors Corp., U.S.A.