2021 Z H2

PARTS DIAGRAM

Valve(s)

E1210



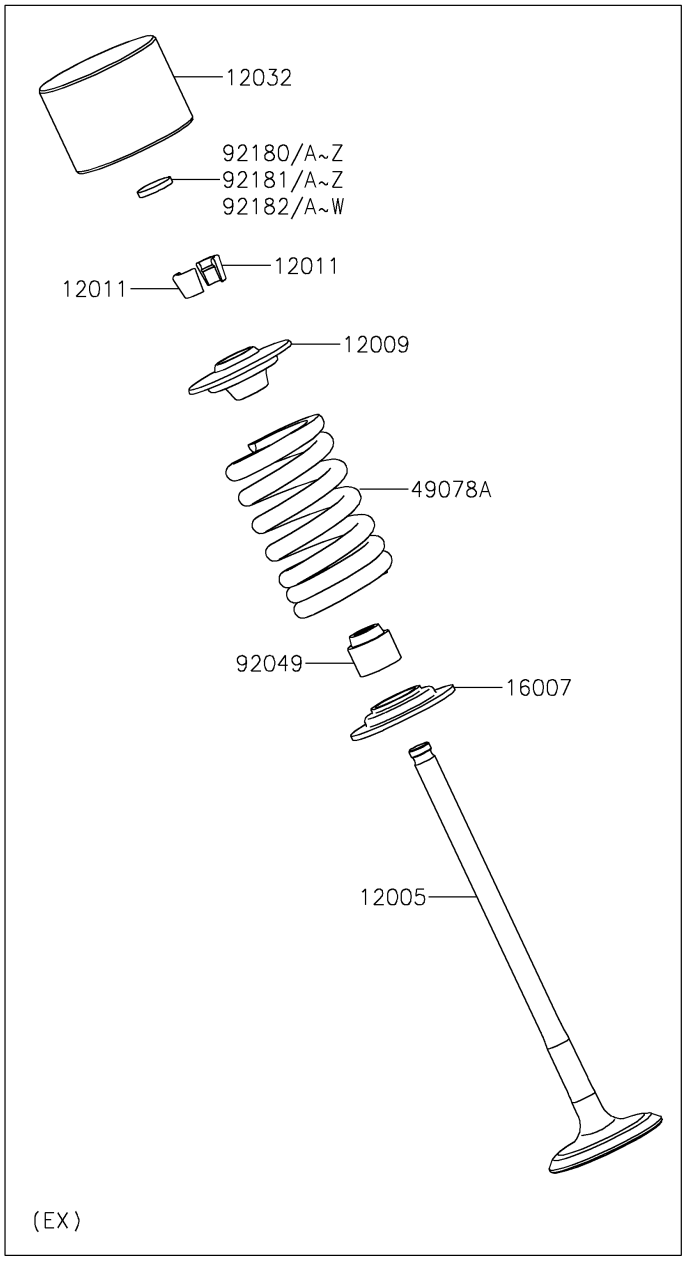

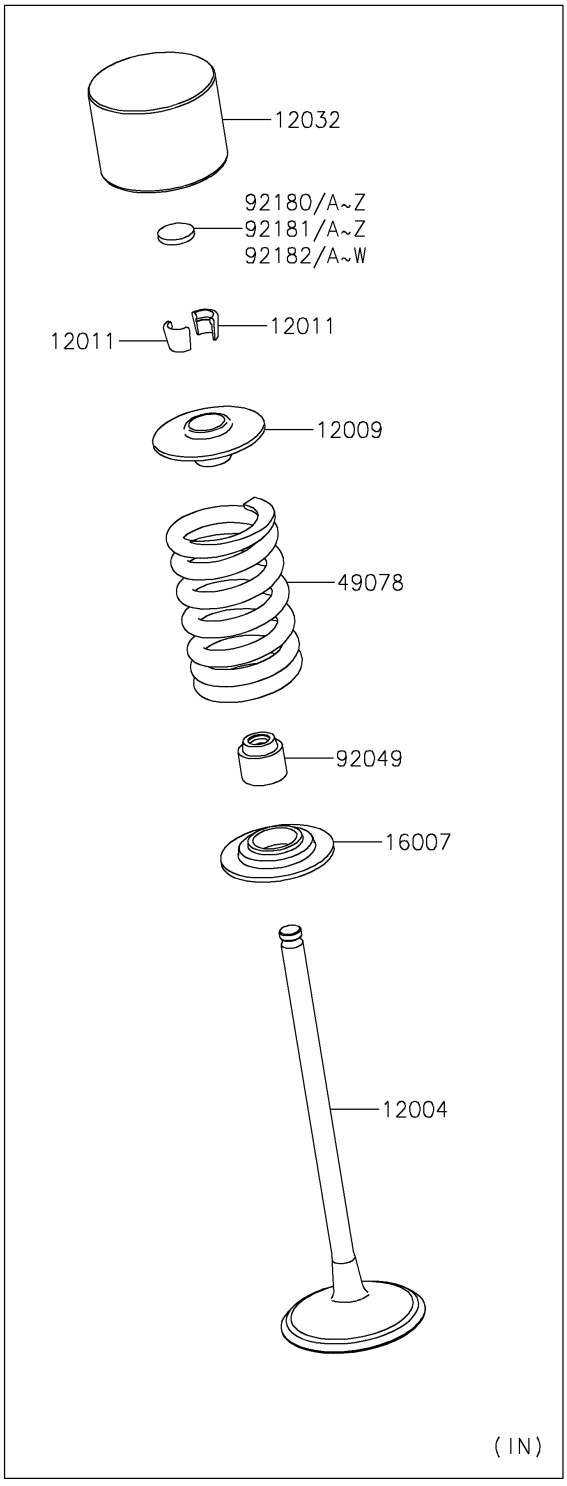

© 2026 Kawasaki Motors Corp., U.S.A.

2021 Z H2

PARTS LIST

Valve(s)

ITEM NAME	PART NUMBER	QUANTITY

© 2026 Kawasaki Motors Corp., U.S.A.