2005 KX250F

PARTS DIAGRAM

Radiator

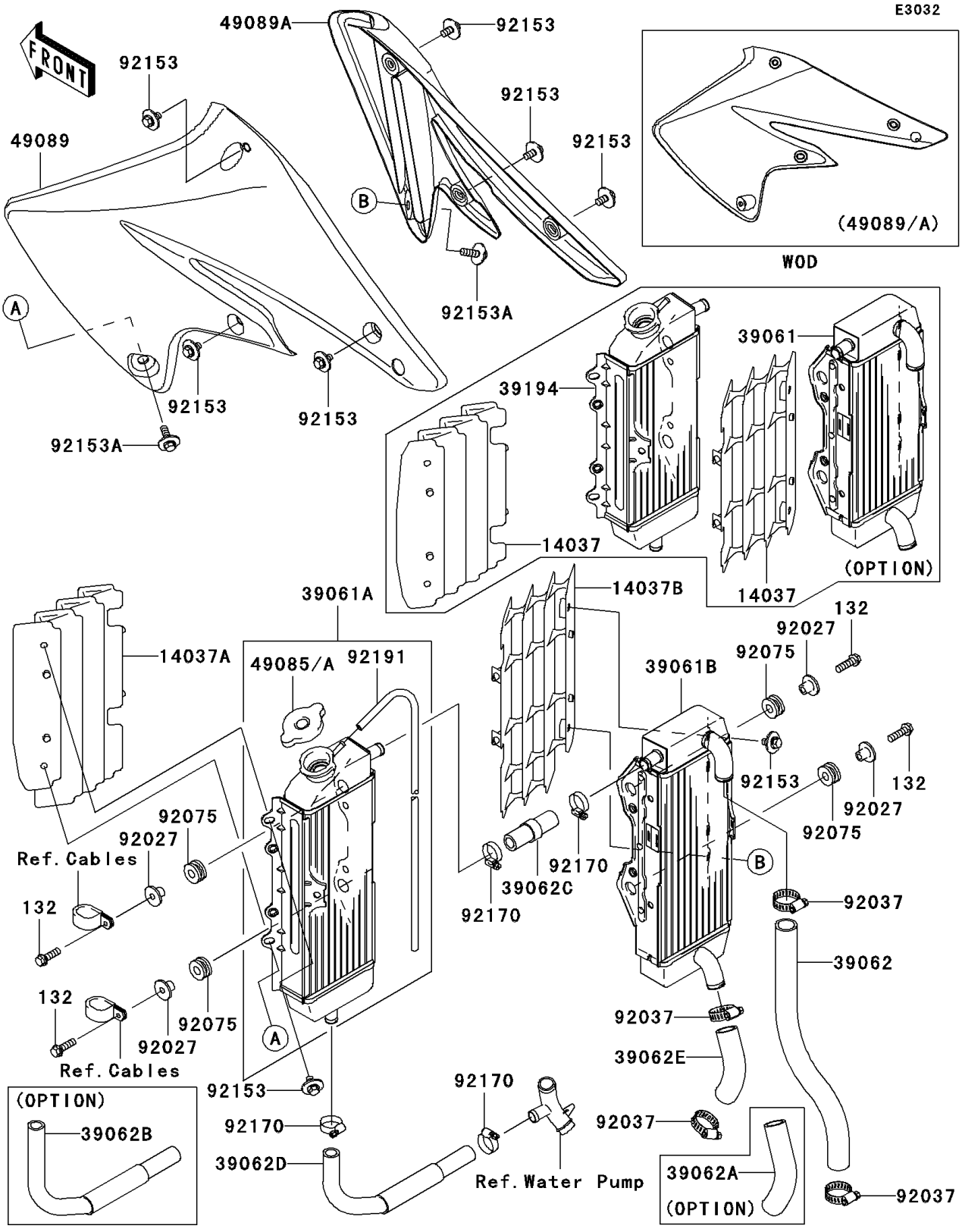

© 2026 Kawasaki Motors Corp., U.S.A.

2005 KX250F

PARTS LIST

Radiator

ITEM NAME	PART NUMBER	QUANTITY
BOLT-FLANGED-SMALL (Ref # 132)	132L0620	4
SCREEN,WHITE (Ref # 14037)	14037-0012-RZ	2
SCREEN,LH,WHITE (Ref # 14037A)	14037-0029-RZ	1
SCREEN,RH,WHITE (Ref # 14037B)	14037-0030-RZ	1
RADIATOR-ASSY,RH,CORE:220MM (Ref # 39061)	39061-0004	1
RADIATOR-ASSY,LH,CORE:260MM (Ref # 39061A)	39061-0044	1
RADIATOR-ASSY,RH,CORE:260MM (Ref # 39061B)	39061-0045	1
HOSE-COOLING,HEAD-RADIATOR RH (Ref # 39062)	39062-0012	1
HOSE-COOLING,RADIATOR RH-P/W (Ref # 39062A)	39062-0040	1
HOSE-COOLING,RADIATOR LH-P/W (Ref # 39062B)	39062-0041	1
HOSE-COOLING,RADIATOR L-R HIGH (Ref # 39062C)	39062-0044	1
HOSE-COOLING,CORE:260MM (Ref # 39062D)	39062-0076	1
HOSE-COOLING,CORE:260MM (Ref # 39062E)	39062-0082	1
RADIATOR-ASSY,LH,CORE:220MM (Ref # 39194)	39194-0006	1
CAP-ASSY-PRESSURE,P1.1 (Ref # 49085)	49085-1070	1
CAP-ASSY-PRESSURE,P1.6 (Ref # 49085A)	49085-1073	1
SHROUD-ENGINE,LH,L.GREEN (Ref # 49089)	49089-0020-290	1
SHROUD-ENGINE,RH,L.GREEN (Ref # 49089A)	49089-0021-290	1
COLLAR,L=11.1 (Ref # 92027)	92027-194	4
CLAMP,COOLING HOSE (Ref # 92037)	92037-1589	4
DAMPER (Ref # 92075)	92075-209	4
BOLT,6X12 (Ref # 92153)	92153-0503	8
BOLT,6X20 (Ref # 92153A)	92153-0864	2
CLAMP (Ref # 92170)	92170-1283	4
TUBE,6X9X700 (Ref # 92191)	92191-1211	1

© 2026 Kawasaki Motors Corp., U.S.A.