2021 MULE PRO-FXT™ EPS LE

PARTS DIAGRAM

Steering Wheel

F2311

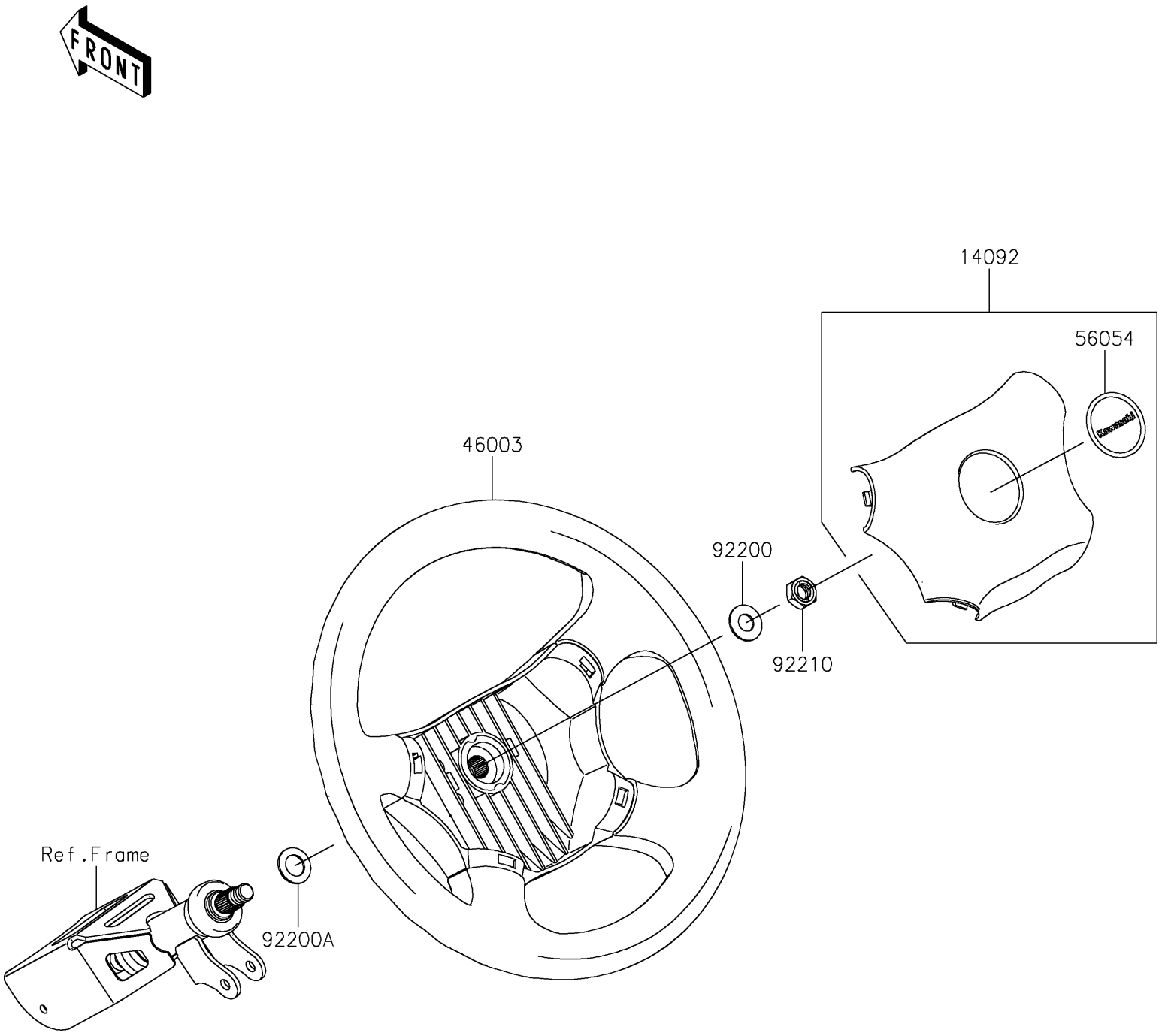

© 2026 Kawasaki Motors Corp., U.S.A.

2021 MULE PRO-FXT™ EPS LE

PARTS LIST

Steering Wheel

ITEM NAME	PART NUMBER	QUANTITY

© 2026 Kawasaki Motors Corp., U.S.A.