2004 KX250F

PARTS DIAGRAM

Ignition System

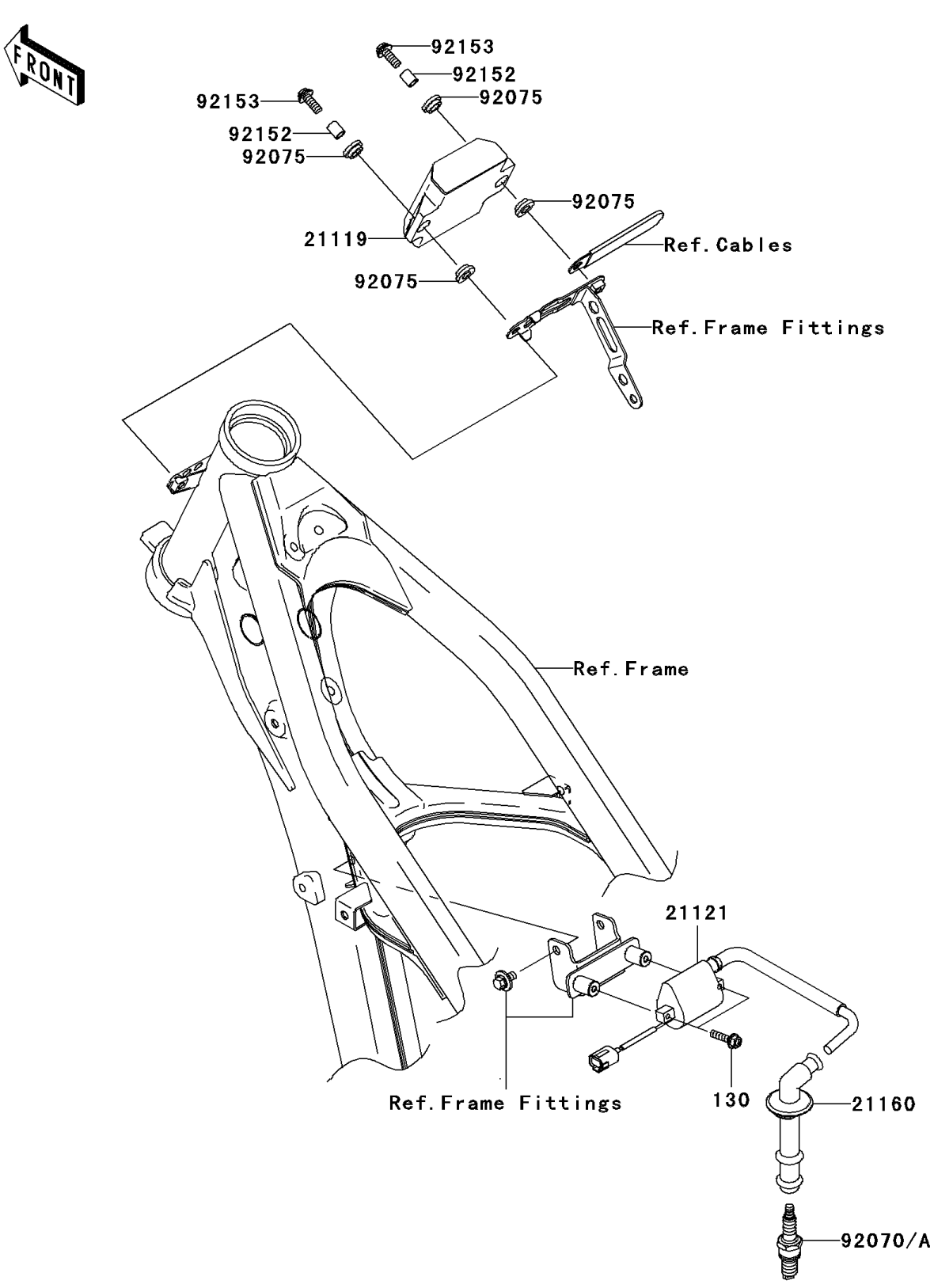

© 2026 Kawasaki Motors Corp., U.S.A.

2004 KX250F

PARTS LIST

Ignition System

ITEM NAME	PART NUMBER	QUANTITY
BOLT-FLANGED (Ref # 130)	130L0520	2
IGNITER (Ref # 21119)	21119-0038	1
COIL-IGNITION (Ref # 21121)	21121-0010	1
CAP-ASSY-PLUG (Ref # 21160)	21160-0009	1
PLUG-SPARK,CR8EB(NGK) (Ref # 92070)	92070-0001	1
PLUG-SPARK,CR9EB(NGK) (Ref # 92070A)	92070-0002	1
DAMPER,8MM (Ref # 92075)	92075-1138	4
COLLAR,IGNITER (Ref # 92152)	92152-1421	2
BOLT,6X20 (Ref # 92153)	92153-0626	2

© 2026 Kawasaki Motors Corp., U.S.A.