2004 KX250F

PARTS DIAGRAM

Oil Pump

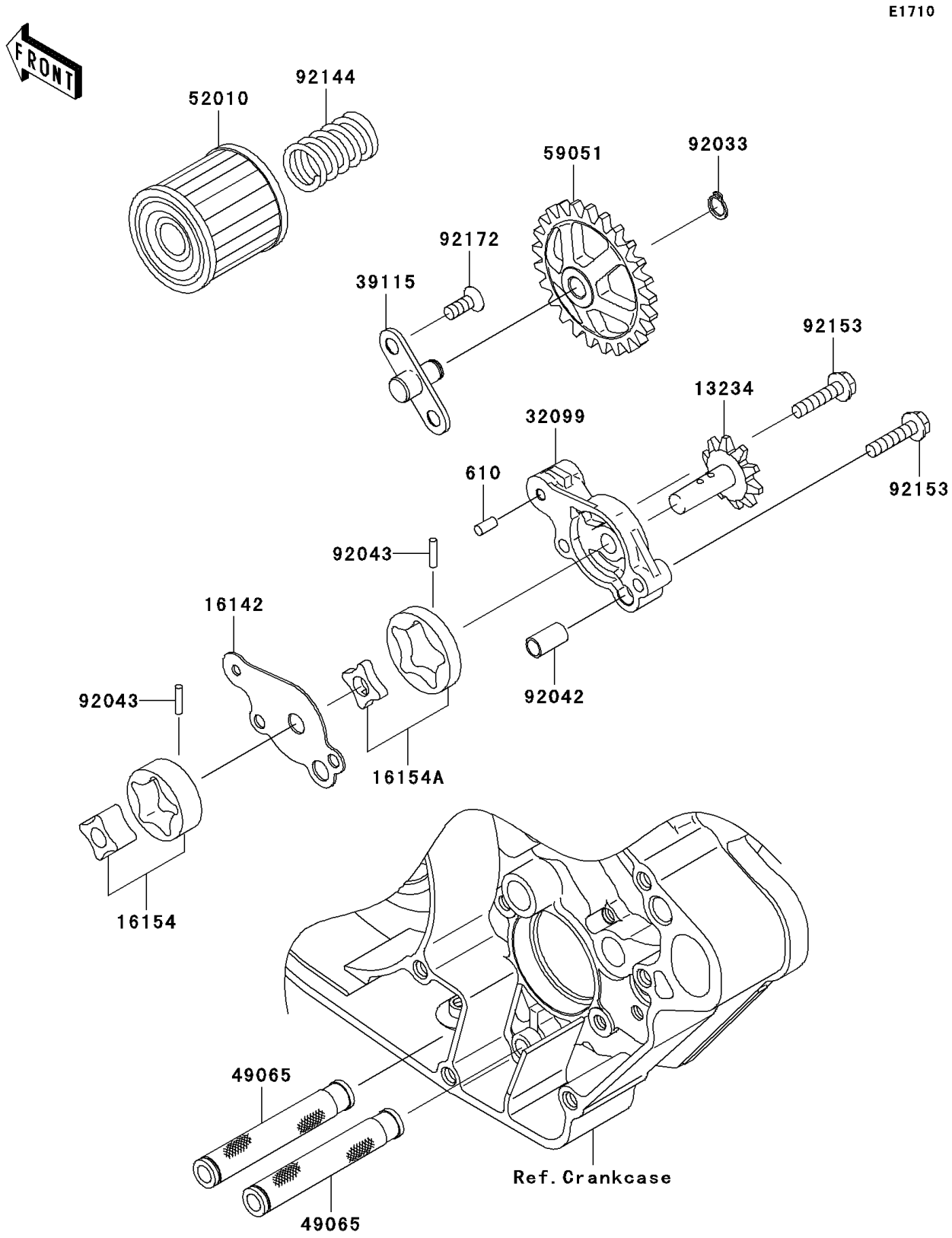

© 2026 Kawasaki Motors Corp., U.S.A.

2004 KX250F

PARTS LIST

Oil Pump

ITEM NAME	PART NUMBER	QUANTITY
ROLLER,4X8 (Ref # 610)	610A0408	1
SHAFT-COMP,OIL PUMP (Ref # 13234)	13234-0005	1
COVER-PUMP (Ref # 16142)	16142-0003	1
ROTOR-PUMP,SCAVENGE (Ref # 16154)	16154-0020	1
ROTOR-PUMP,FEED (Ref # 16154A)	16154-0023	1
CASE,OIL PUMP (Ref # 32099)	32099-0001	1
SHAFT-IDLER,OIL PUMP (Ref # 39115)	39115-0007	1
FILTER-OIL (Ref # 49065)	49065-0005	2
ELEMENT-OIL FILTER (Ref # 52010)	52010-0001	1
GEAR-SPUR,PUMP IDLER (Ref # 59051)	59051-0009	1
RING-SNAP,8MM (Ref # 92033)	92033-1039	1
PIN,DOWEL,6.3X8X14 (Ref # 92042)	92042-007	1
PIN,2.5X11.8 (Ref # 92043)	92043-0018	2
SPRING (Ref # 92144)	92144-1761	1
BOLT,5X22 (Ref # 92153)	92153-0749	2
SCREW,6X14 (Ref # 92172)	92172-0087	2

© 2026 Kawasaki Motors Corp., U.S.A.