2004 KX250

PARTS DIAGRAM

Front Master Cylinder

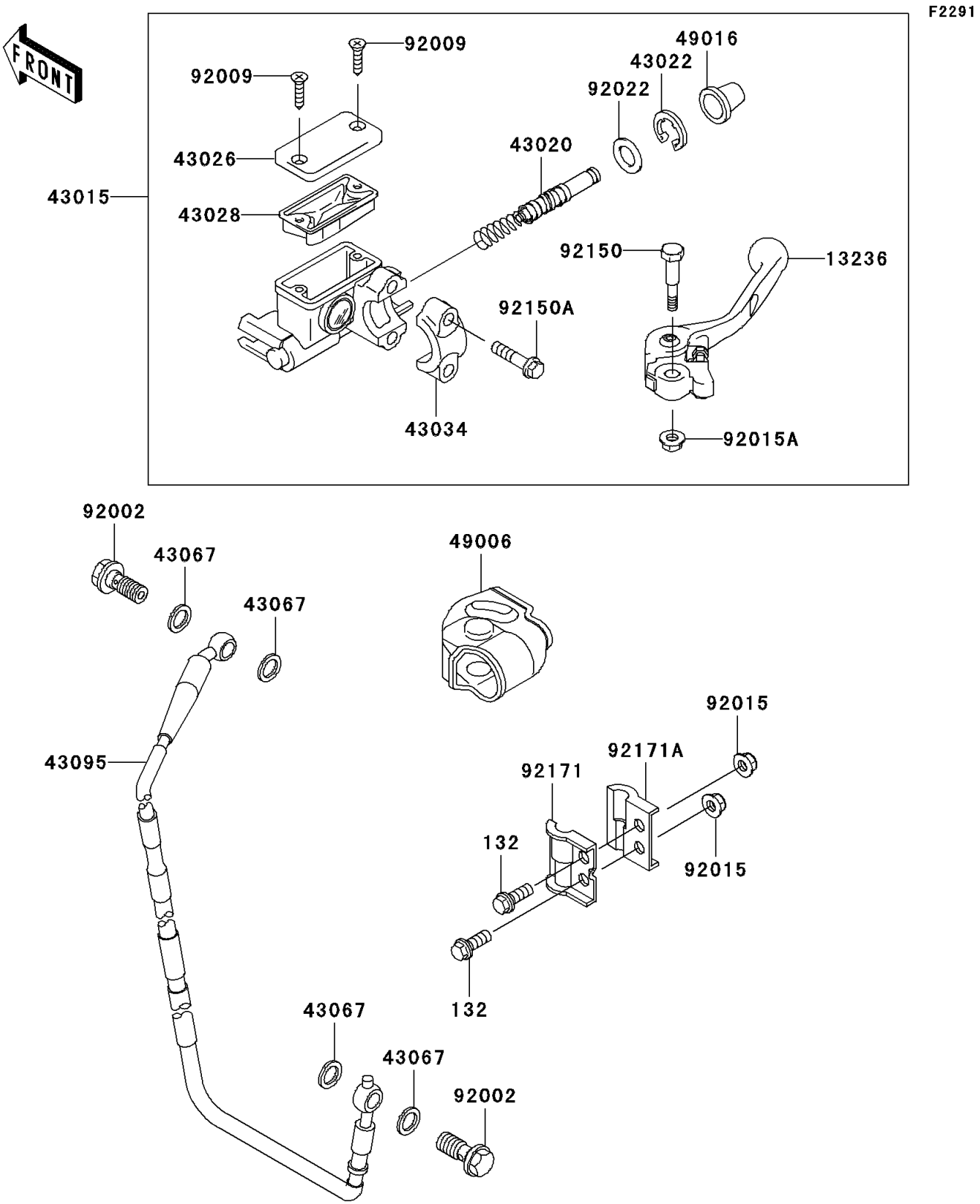

© 2026 Kawasaki Motors Corp., U.S.A.

2004 KX250

PARTS LIST

Front Master Cylinder

ITEM NAME	PART NUMBER	QUANTITY
BOLT-FLANGED-SMALL (Ref # 132)	132G0616	2
LEVER-COMP,FRONT BRAKE (Ref # 13236)	13236-1346	1
CYLINDER-ASSY-MASTER,FR (Ref # 43015)	43015-1674	1
PISTON-COMP-BRAKE (Ref # 43020)	43020-1123	1
STOPPER-BRAKE,PISTON (Ref # 43022)	43022-1010	1
CAP-BRAKE (Ref # 43026)	43026-1075	1
DIAPHRAGM (Ref # 43028)	43028-1067	1
HOLDER-BRAKE (Ref # 43034)	43034-1110	1
WASHER,10.5X15X1.5 (Ref # 43067)	43067-001	4
HOSE-BRAKE,FR (Ref # 43095)	43095-0054	1
BOOT,FRONT BRAKE LEVER (Ref # 49006)	49006-1344	1
COVER-SEAL,MASTER CYLINDER (Ref # 49016)	49016-1044	1
BOLT,OIL,L=23 (Ref # 92002)	92002-1888	2
SCREW,4MM (Ref # 92009)	92009-1458	2
NUT,LOCK,FLANGED,6MM (Ref # 92015)	92015-1339	2
NUT,FLANGED,6MM (Ref # 92015A)	92015-1528	1
WASHER (Ref # 92022)	92022-1814	1
BOLT,LEVER SET (Ref # 92150)	92150-1451	1
BOLT (Ref # 92150A)	92150-1452	2
CLAMP,BRAKE HOSE,OUTSIDE (Ref # 92171)	92171-0235	1
CLAMP,BRAKE HOSE,INSIDE (Ref # 92171A)	92171-0291	1

© 2026 Kawasaki Motors Corp., U.S.A.