2021 NINJA® 650

PARTS DIAGRAM

Taillight(s)

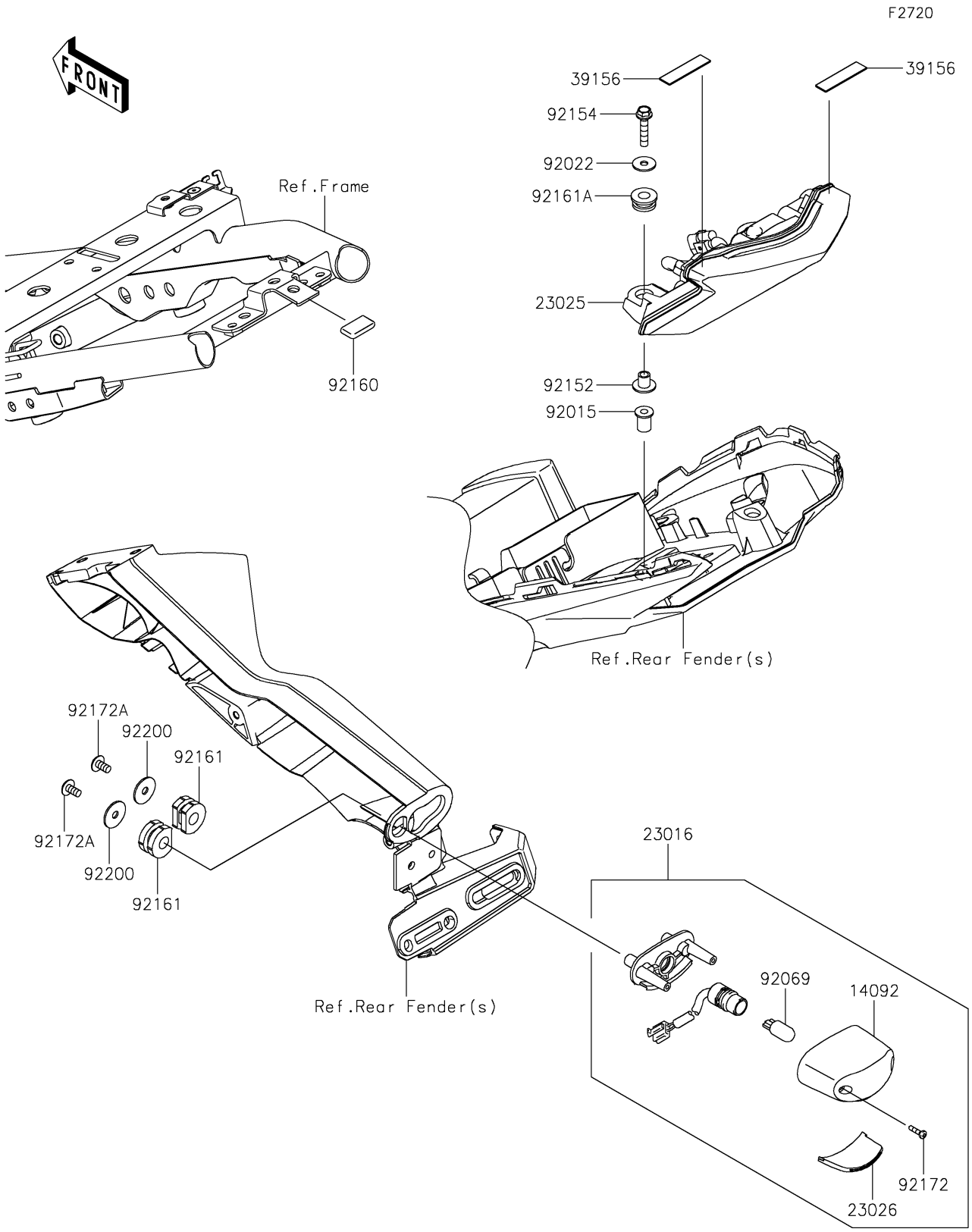

© 2026 Kawasaki Motors Corp., U.S.A.

2021 NINJA® 650

PARTS LIST

Taillight(s)

Kawasaki
Let the Good Times Roll®

ITEM NAME	PART NUMBER	QUANTITY
COVER,LICENSE LAMP (Ref # 14092)	14092-0001	1
LAMP-ASSY,LICENSE (Ref # 23016)	23016-0656	1
LAMP-TAIL,LED (Ref # 23025)	23025-0362	1
LENS,LICENCE LAMP (Ref # 23026)	23026-0035	1
PAD,40X10X1 (Ref # 39156)	39156-2595	2
NUT,WELL,5MM (Ref # 92015)	92015-1757	2
WASHER,5.2X16X1.2 (Ref # 92022)	92022-263	2
BULB,12V 5W (Ref # 92069)	92069-1016	1
COLLAR (Ref # 92152)	92152-1592	2
BOLT,FLANGED,5X25 (Ref # 92154)	92154-0846	2
DAMPER (Ref # 92160)	92160-1190	1
DAMPER (Ref # 92161)	92161-0776	2
DAMPER,8X18X8.1 (Ref # 92161A)	92161-1369	2
SCREW,TAPPING,2.9X13 (Ref # 92172)	92172-0343	2
SCREW,TAPPING,5X16 (Ref # 92172A)	92172-0427	2
WASHER,5.5X20X1.2 (Ref # 92200)	92200-0284	2

© 2026 Kawasaki Motors Corp., U.S.A.