2018 NINJA® 1000 ABS

PARTS DIAGRAM

Turn Signals

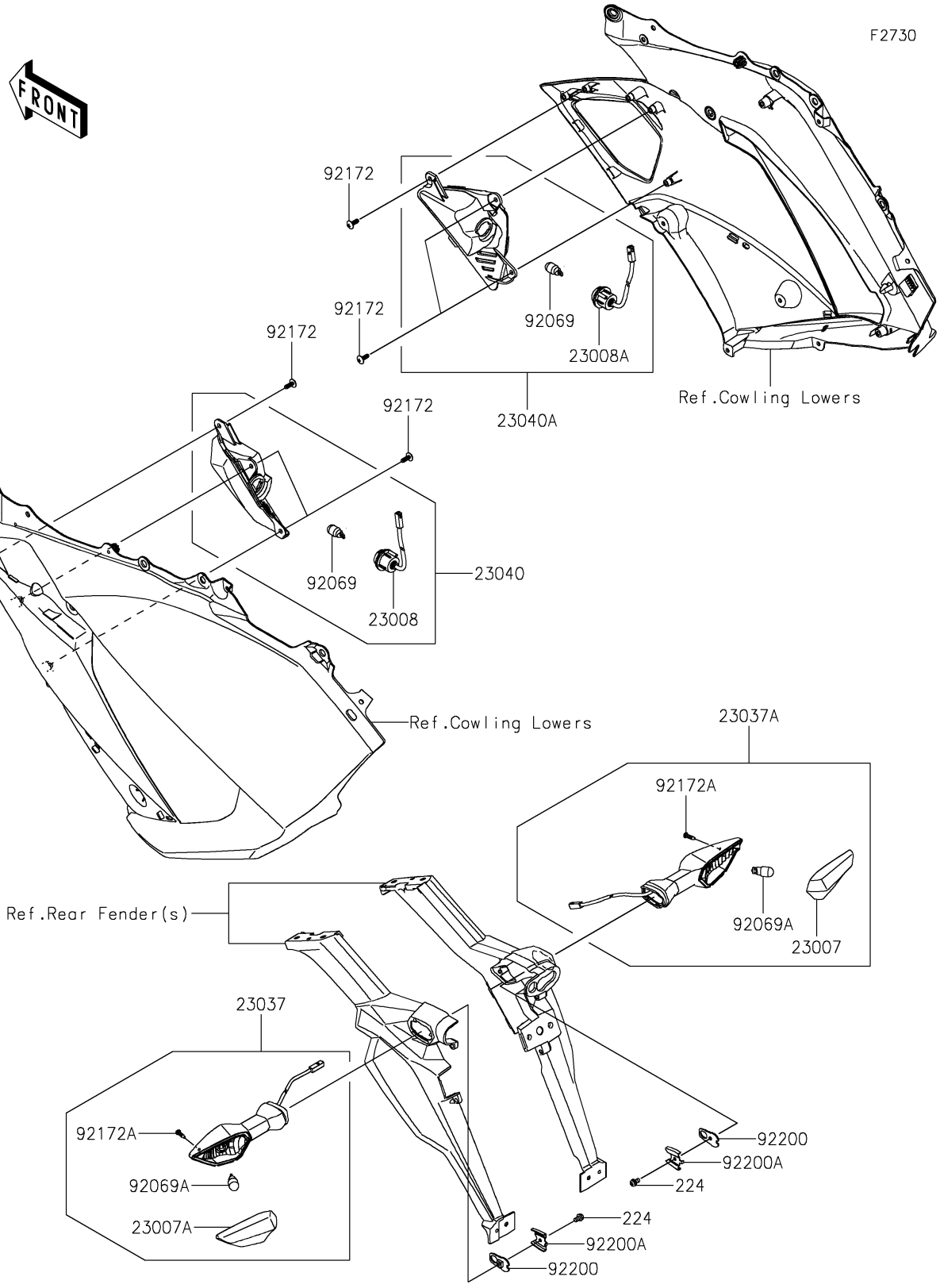

© 2026 Kawasaki Motors Corp., U.S.A.

2018 NINJA® 1000 ABS

PARTS LIST

Turn Signals

ITEM NAME	PART NUMBER	QUANTITY
SCREW-PAN-WP-CROS,4X8 (Ref # 224)	224AB0408	2
LENS-COMP (Ref # 23007)	23007-0205	1
LENS-COMP (Ref # 23007A)	23007-0206	1
SOCKET-ASSY,LH (Ref # 23008)	23008-0167	1
SOCKET-ASSY,RH (Ref # 23008A)	23008-0168	1
LAMP-ASSY-SIGNAL,RR,LH (Ref # 23037)	23037-0348	1
LAMP-ASSY-SIGNAL,RR,RH (Ref # 23037A)	23037-0349	1
LAMP-SIGNAL,FR,LH (Ref # 23040)	23040-0135	1
LAMP-SIGNAL,FR,RH (Ref # 23040A)	23040-0136	1
BULB,12V 10W (Ref # 92069)	92069-0058	2
BULB,12V 10W (Ref # 92069A)	92069-0090	2
SCREW,TAPPING,5X14 (Ref # 92172)	92172-0265	6
SCREW,4X14 (Ref # 92172A)	92172-1117	2
WASHER,NUT 4MM (Ref # 92200)	92200-0854	2
WASHER (Ref # 92200A)	92200-0855	2

© 2026 Kawasaki Motors Corp., U.S.A.