2021 VULCAN® 1700 VAQUERO® ABS

PARTS DIAGRAM

Water Pump

E3031

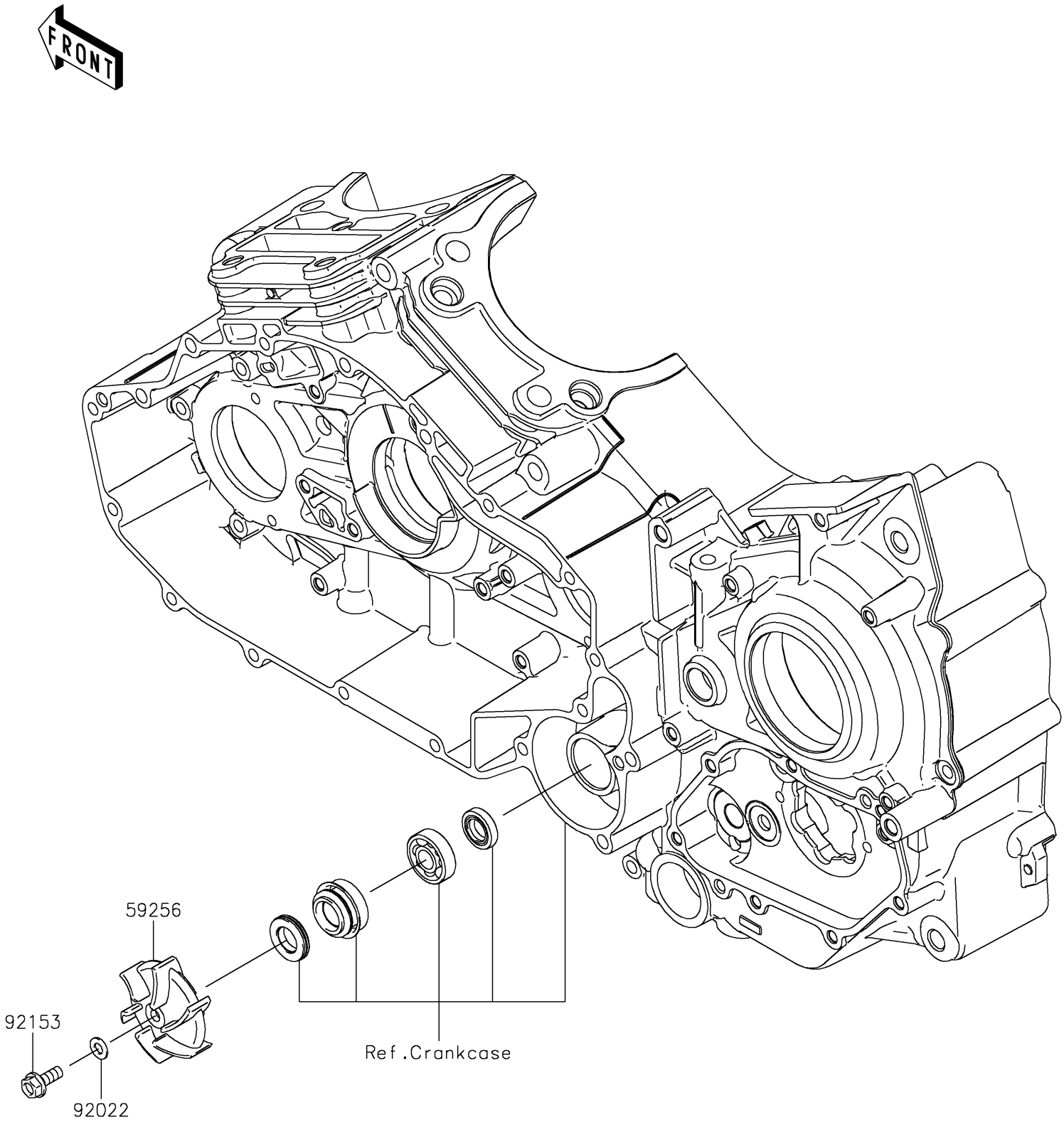

© 2026 Kawasaki Motors Corp., U.S.A.

2021 VULCAN® 1700 VAQUERO® ABS

PARTS LIST

Water Pump

ITEM NAME	PART NUMBER	QUANTITY
IMPELLER (Ref # 59256)	59256-0002	1
WASHER,6.1X12X1 (Ref # 92022)	92022-077	1
BOLT,LEFT HANDED,6X16 (Ref # 92153)	92153-0323	1

© 2026 Kawasaki Motors Corp., U.S.A.