2021 VULCAN® 1700 VAQUERO® ABS

PARTS DIAGRAM

Crankcase Bolt Pattern

E1412

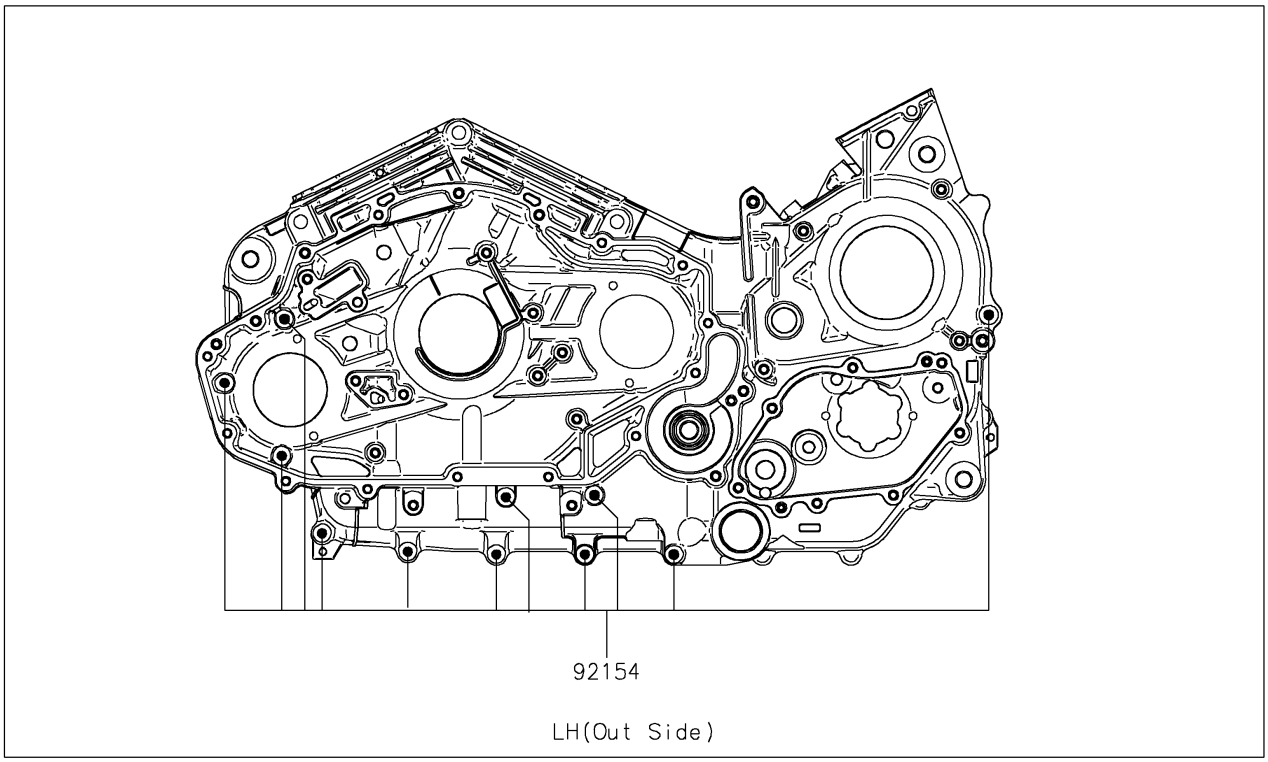

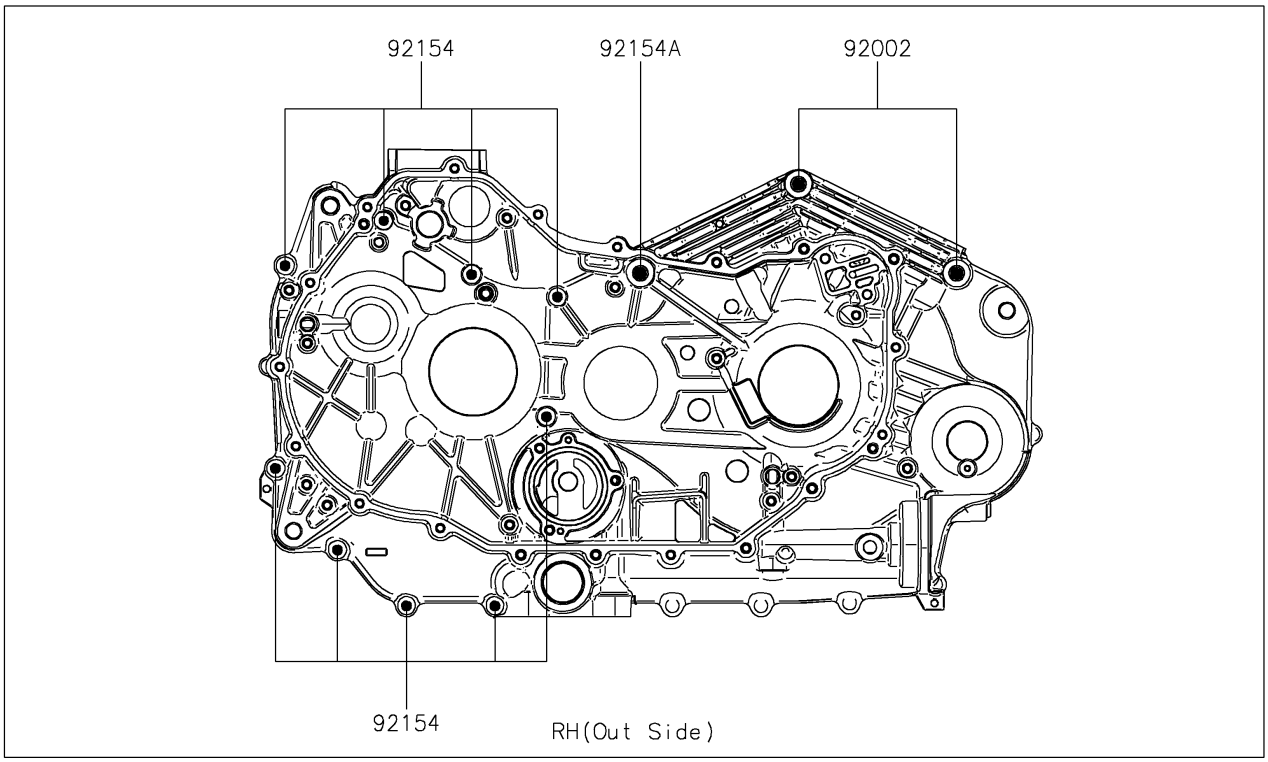

© 2026 Kawasaki Motors Corp., U.S.A.

2021 VULCAN® 1700 VAQUERO® ABS

PARTS LIST

Crankcase Bolt Pattern

ITEM NAME	PART NUMBER	QUANTITY
BOLT,FLANGED,10X190 (Ref # 92002)	92002-1548	2
BOLT,FLANGED-SMALL,6X90 (Ref # 92154)	92154-0132	20
BOLT,FLANGED,10X190 (Ref # 92154A)	92154-1765	1

© 2026 Kawasaki Motors Corp., U.S.A.