2021 VULCAN® 1700 VAQUERO® ABS

PARTS DIAGRAM

Crankshaft

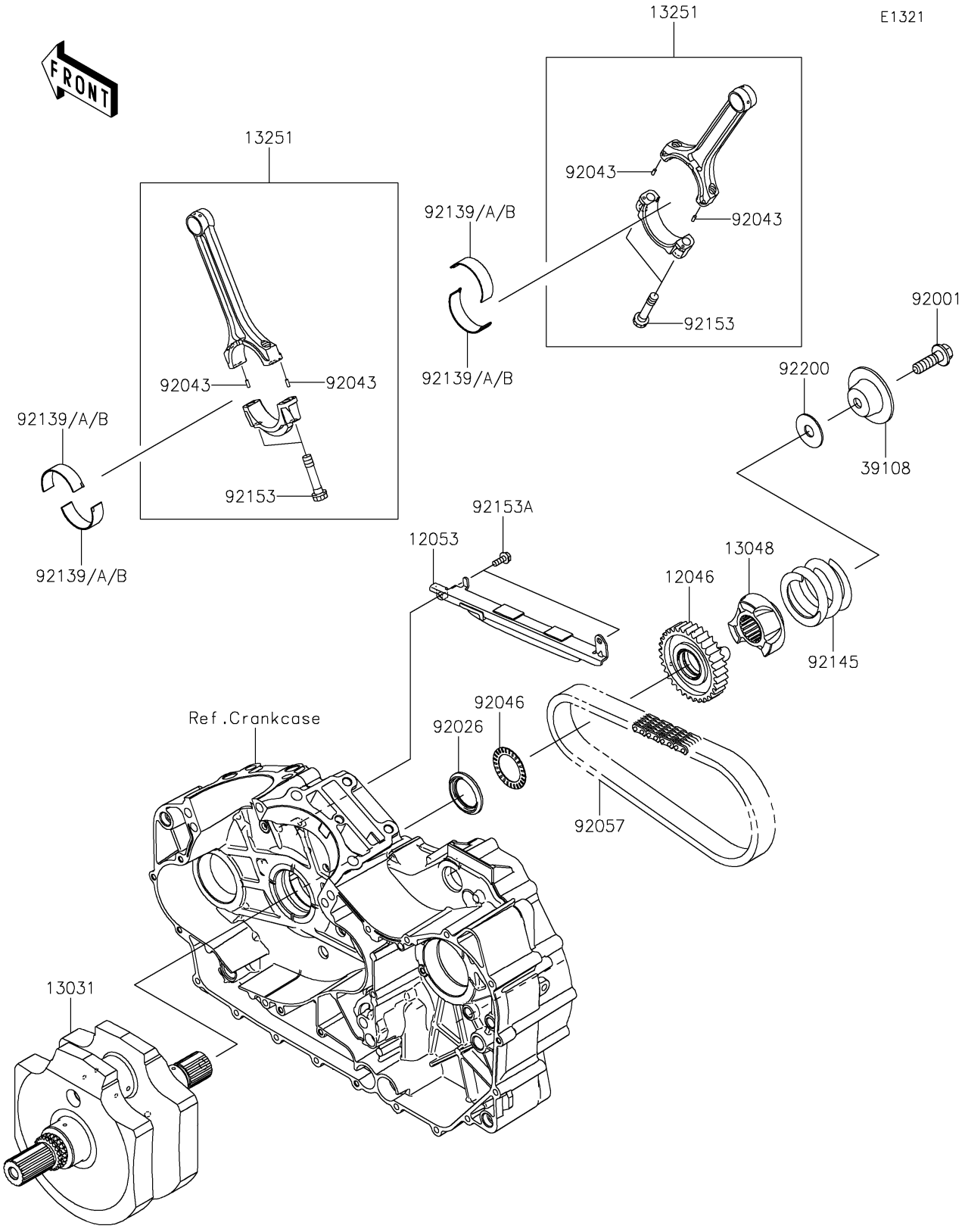

© 2026 Kawasaki Motors Corp., U.S.A.

2021 VULCAN® 1700 VAQUERO® ABS

PARTS LIST

Crankshaft

ITEM NAME	PART NUMBER	QUANTITY
SPROCKET,PRIMARY,33T (Ref # 12046)	12046-0065	1
GUIDE-CHAIN,PRIMARY,UPP (Ref # 12053)	12053-0122	1
CRANKSHAFT-COMP (Ref # 13031)	13031-0104	1
CAM-DAMPER (Ref # 13048)	13048-0017	1
ROD-ASSY-CONNECTING (Ref # 13251)	13251-0026	2
RETAINER-SPRING (Ref # 39108)	39108-0014	1
BOLT,FLANGED,12X40 (Ref # 92001)	92001-1146	1
SPACER (Ref # 92026)	92026-0145	1
PIN,3X8.5 (Ref # 92043)	92043-0033	4
BEARING-NEEDLE (Ref # 92046)	92046-0033	1
CHAIN,PRIMARY,89HV303CF-92 (Ref # 92057)	92057-0155	1
BUSHING,CONNECTING ROD,BLUE (Ref # 92139)	92139-0225	4
BUSHING,CONNECTING ROD,BLACK (Ref # 92139A)	92139-0226	AR
BUSHING,CONNECTING ROD,BROWN (Ref # 92139B)	92139-0227	AR
SPRING,58X11X46.5 (Ref # 92145)	92145-0592	1
BOLT,CONNECTING ROD (Ref # 92153)	92153-0314	4
BOLT,FLANGED,6X16 (Ref # 92153A)	92153-0713	2
WASHER,12X34X1.6 (Ref # 92200)	92200-0478	1

© 2026 Kawasaki Motors Corp., U.S.A.