2021 VULCAN® 1700 VAQUERO® ABS

PARTS DIAGRAM

Air Cleaner

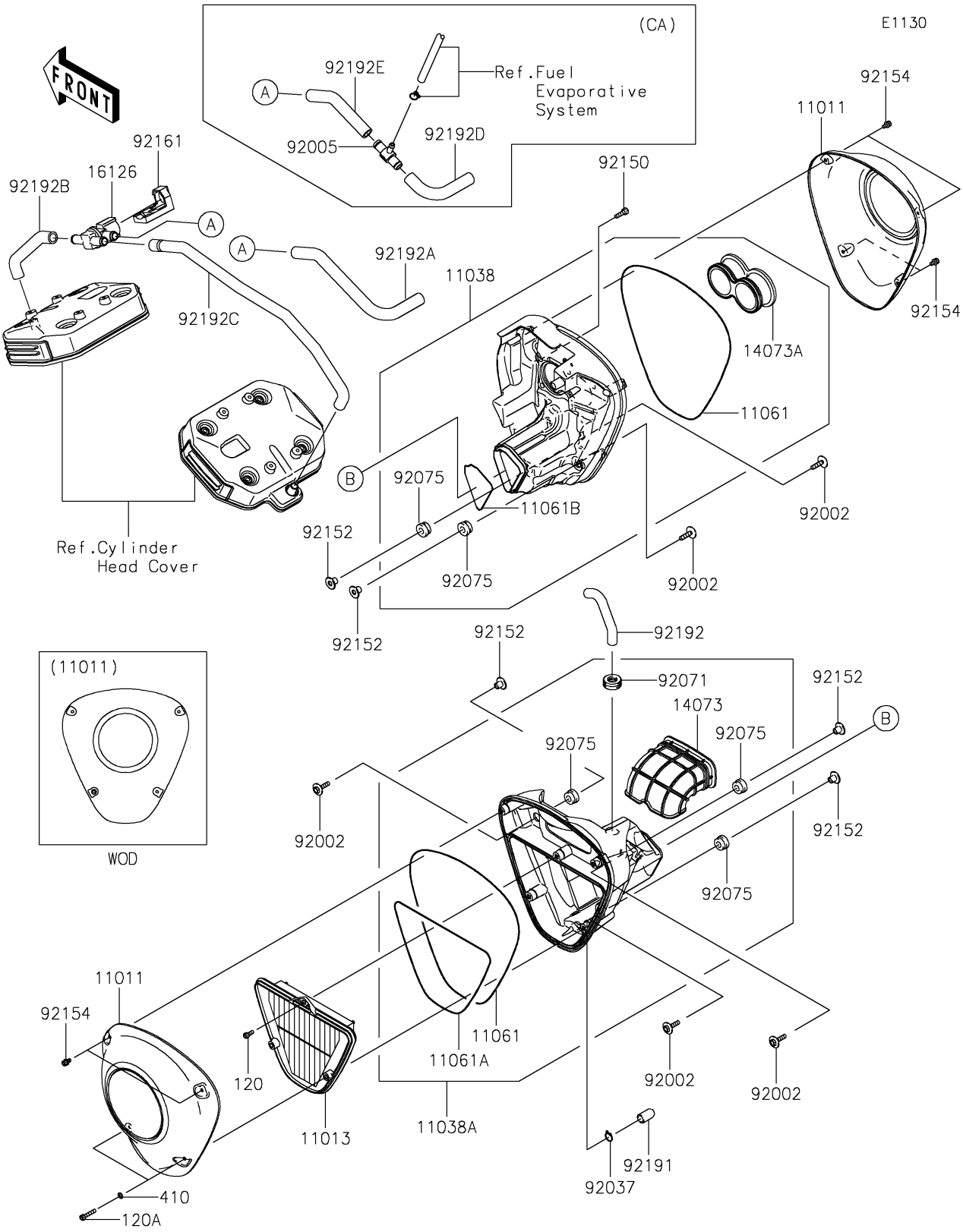

© 2026 Kawasaki Motors Corp., U.S.A.

2021 VULCAN® 1700 VAQUERO® ABS

PARTS LIST

Air Cleaner

ITEM NAME	PART NUMBER	QUANTITY
CASE-AIR FILTER,F.S.BLACK (Ref # 11011)	11011-0172	2
ELEMENT-AIR FILTER (Ref # 11013)	11013-0031	1
CASE-ASSY-AIR FILTER,RH (Ref # 11038)	11038-0708	1
CASE-ASSY-AIR FILTER,LH (Ref # 11038A)	11038-0710	1
GASKET,3X812 (Ref # 11061)	11061-0346	2
GASKET,3X630 (Ref # 11061A)	11061-0347	1
GASKET,3X222 (Ref # 11061B)	11061-0367	1
BOLT-SOCKET,5X12 (Ref # 120)	120CA0512	1
BOLT-SOCKET,5X25 (Ref # 120A)	120R0525	2
DUCT,INTAKE (Ref # 14073)	14073-0202	1
DUCT,THROBO. FUNNEL (Ref # 14073A)	14073-0203	1
VALVE,AIR SWITCHING (Ref # 16126)	16126-0746	1
W-PLAIN-S,5MM (Ref # 410)	410S0500	2
BOLT,6X25 (Ref # 92002)	92002-1135	5
CLAMP,14.5MM (Ref # 92037)	92037-1900	1
GROMMET,AIR SUCTION VALVE (Ref # 92071)	92071-1249	1
DAMPER,RUBBER (Ref # 92075)	92075-1123	5
BOLT,6X18 (Ref # 92150)	92150-1645	5
COLLAR,6.3X10X12 (Ref # 92152)	92152-0694	5
BOLT,SOCKET,5X10 (Ref # 92154)	92154-0131	6
DAMPER (Ref # 92161)	92161-0309	1
TUBE (Ref # 92191)	92191-1704	1
TUBE,BREATHER (Ref # 92192)	92192-0650	1
TUBE,FR HEAD-ASWV (Ref # 92192B)	92192-0652	1
TUBE,RR HEAD-ASWV (Ref # 92192C)	92192-0653	1

© 2026 Kawasaki Motors Corp., U.S.A.