2021 VULCAN® 1700 VOYAGER® ABS

PARTS DIAGRAM

Cables

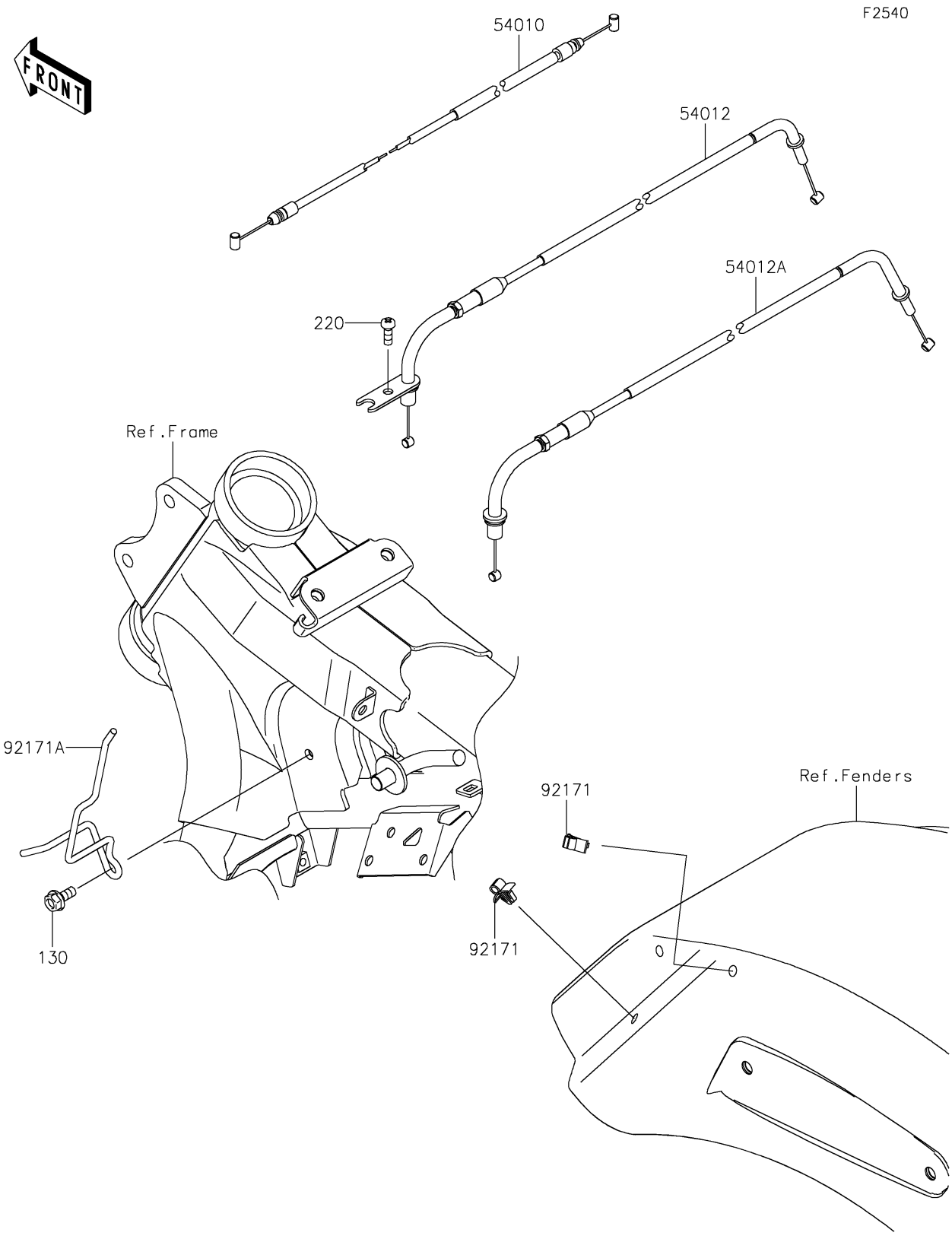

© 2026 Kawasaki Motors Corp., U.S.A.

2021 VULCAN® 1700 VOYAGER® ABS

PARTS LIST

Cables

ITEM NAME	PART NUMBER	QUANTITY
BOLT-FLANGED,6X14 (Ref # 130)	130BB0614	1
SCREW-PAN-CROS,5X14 (Ref # 220)	220AB0514	1
CABLE,SEAT LOCK (Ref # 54010)	54010-0092	1
CABLE-THROTTLE,OPENING (Ref # 54012)	54012-0282	1
CABLE-THROTTLE,CLOSING (Ref # 54012A)	54012-0283	1
CLAMP,SEAT LOCK CABLE (Ref # 92171)	92171-0328	2
CLAMP,CABLE (Ref # 92171A)	92171-1838	1

© 2026 Kawasaki Motors Corp., U.S.A.