2021 VERSYS® 650 ABS

PARTS DIAGRAM

Chassis Electrical Equipment

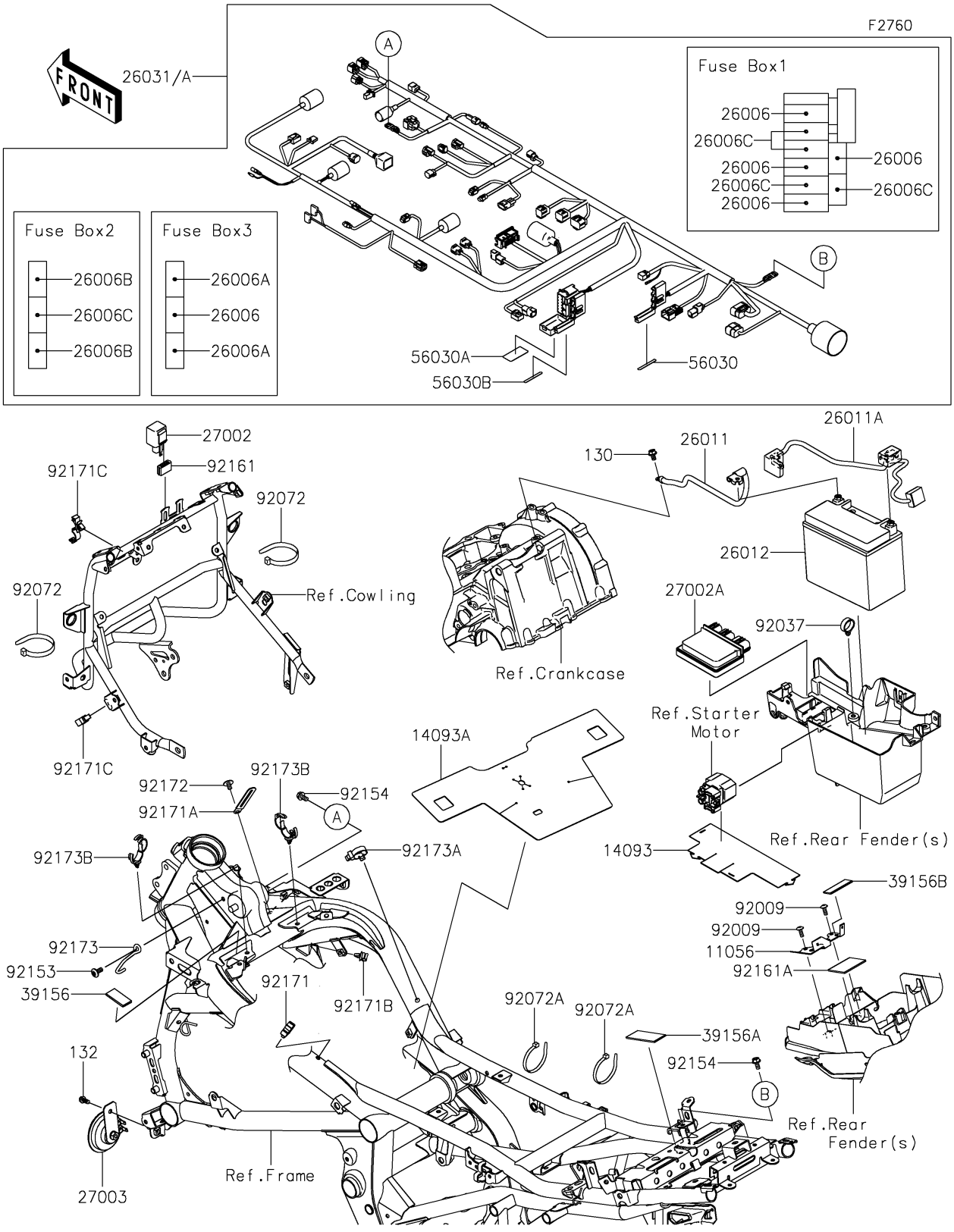

© 2026 Kawasaki Motors Corp., U.S.A.

2021 VERSYS® 650 ABS

PARTS LIST

Chassis Electrical Equipment

ITEM NAME	PART NUMBER	QUANTITY
BRACKET,HARNESS (Ref # 11056)	11056-4346	1
BOLT-FLANGED,6X10 (Ref # 130)	130BA0610	1
COVER,MG. SWITCH (Ref # 14093)	14093-0251	1
COVER,HEAT SHIELD (Ref # 14093A)	14093-0309	1
FUSE,MINI BLADE,15A,BLUE (Ref # 26006)	26006-0001	5
FUSE,MINI BLADE,25A,NATURAL (Ref # 26006A)	26006-0020	2
FUSE,MINI BLADE,5A,TAN (Ref # 26006B)	26006-1077	2
FUSE,MINI BLADE,10A,RED (Ref # 26006C)	26006-1078	5
WIRE-LEAD,BATTERY(-) (Ref # 26011)	26011-0301	1
WIRE-LEAD,BATTERY(+) (Ref # 26011A)	26011-0876	1
BATTERY,FTX12-BS,12V 10AH (Ref # 26012)	26012-0606	1
RELAY-ASSY,SIGNAL LAMP (Ref # 27002)	27002-0006	1
RELAY-ASSY (Ref # 27002A)	27002-0050	1
HORN (Ref # 27003)	27003-0056	1
PAD,20X40X3 (Ref # 39156)	39156-0831	1
PAD,70X27X2 (Ref # 39156A)	39156-1908	1
PAD,50X18X2 (Ref # 39156B)	39156-1909	1
LABEL,FUSE BOX3 (Ref # 56030)	56030-0400	1
LABEL,FUSE BOX1 (Ref # 56030A)	56030-0705	1
LABEL,FUSE BOX2 (Ref # 56030B)	56030-0879	1
SCREW,TAPPING,5X14 (Ref # 92009)	92009-1197	2
CLAMP,HOSE (Ref # 92037)	92037-1827	1
BAND,L=202 (Ref # 92072)	92072-1195	2
BAND,L=365 (Ref # 92072A)	92072-1197	2
BOLT,SOCKET,6X14 (Ref # 92153)	92153-1446	1
BOLT,FLANGED,6X12 (Ref # 92154)	92154-1050	2
DAMPER,15X25X8.5 (Ref # 92161)	92161-1443	1
DAMPER,40X50X2 (Ref # 92161A)	92161-1757	1
CLAMP,BRAKE HOSE (Ref # 92171)	92171-0316	1

© 2026 Kawasaki Motors Corp., U.S.A.

2021 VERSYS® 650 ABS

PARTS LIST

Chassis Electrical Equipment

ITEM NAME	PART NUMBER	QUANTITY
CLAMP (Ref # 92171A)	92171-0462	1
CLAMP (Ref # 92171B)	92171-0640	1
CLAMP (Ref # 92171C)	92171-0782	2
SCREW,6X10 (Ref # 92172)	92172-0005	1
CLAMP,HEAD GUSSET,LH (Ref # 92173)	92173-1329	1
CLAMP,CABLE STRAP (Ref # 92173A)	92173-1336	1
CLAMP,20MM DIA. (Ref # 92173B)	92173-1394	2
BOLT-FLANGED-SMALL,6X12 (Ref # 132)	132BB0612	1

© 2026 Kawasaki Motors Corp., U.S.A.