2021 VERSYS® 650 ABS

PARTS DIAGRAM

Fuel Tank

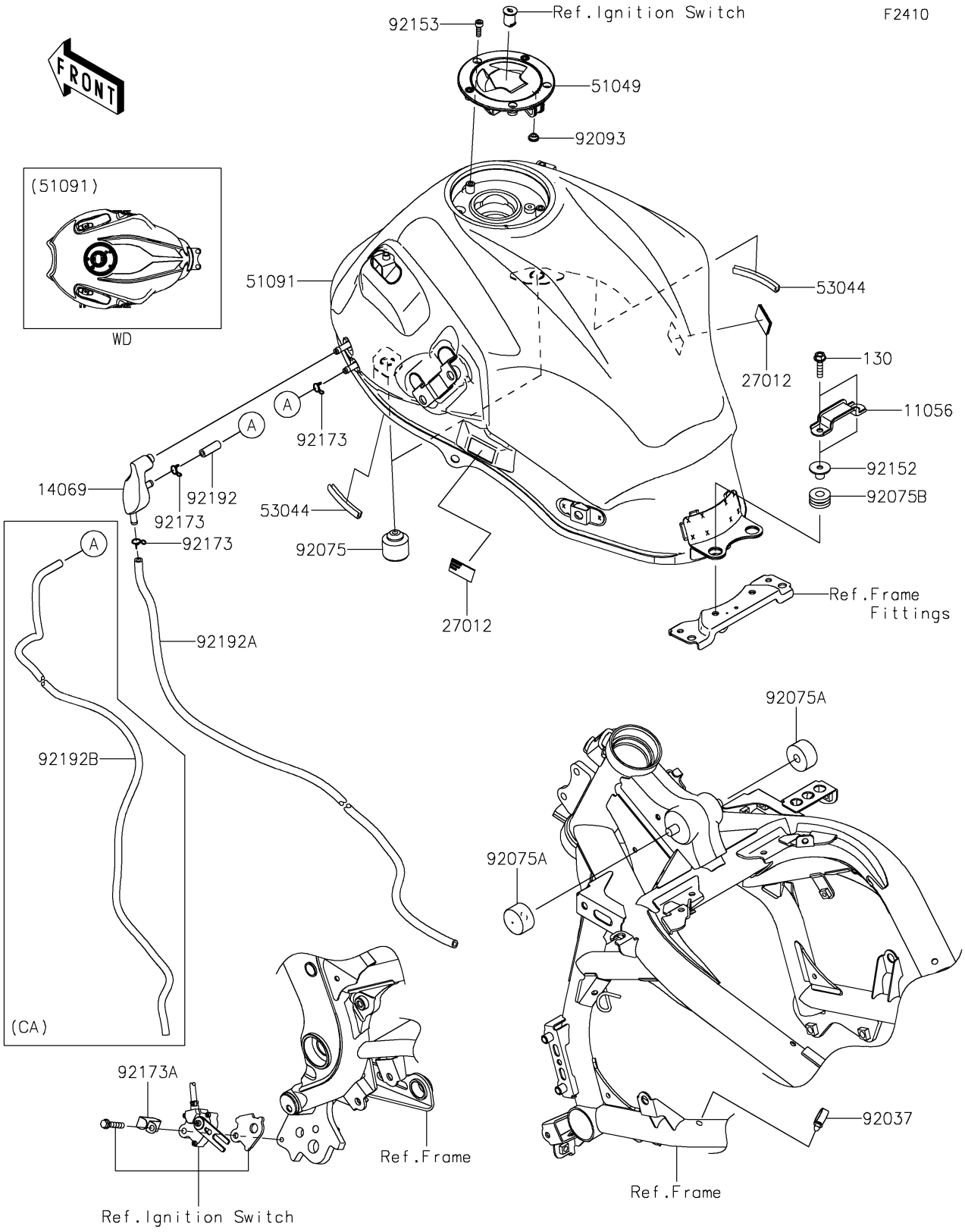

© 2026 Kawasaki Motors Corp., U.S.A.

2021 VERSYS® 650 ABS

PARTS LIST

Fuel Tank

ITEM NAME	PART NUMBER	QUANTITY
BRACKET,SEAT (Ref # 11056)	11056-0361	1
BOLT-FLANGED,6X25 (Ref # 130)	130BA0625	2
HOOK,DUAL LOCK FASTENER,20X30 (Ref # 27012)	27012-0784	2
CAP-TANK,FUEL (Ref # 51049)	51049-0749	1
TANK-COMP-FUEL,M.S.BLACK (Ref # 51091)	51091-5390-660	1
TRIM,L=60 (Ref # 53044)	53044-1249	2
CLAMP,HOSE (Ref # 92037)	92037-1827	1
DAMPER (Ref # 92075)	92075-1002	2
DAMPER,FUEL TANK (Ref # 92075A)	92075-125	2
DAMPER,10X24X12 (Ref # 92075B)	92075-1690	2
SEAL,FUEL TANK CAP (Ref # 92093)	92093-1030	1
COLLAR,6.5X10X13.1 (Ref # 92152)	92152-0910	2
BOLT,SOCKET,5X16 (Ref # 92153)	92153-1616	3
CLAMP (Ref # 92173A)	92173-0833	1

© 2026 Kawasaki Motors Corp., U.S.A.