2021 VERSYS® 650 ABS

PARTS DIAGRAM

Muffler(s)

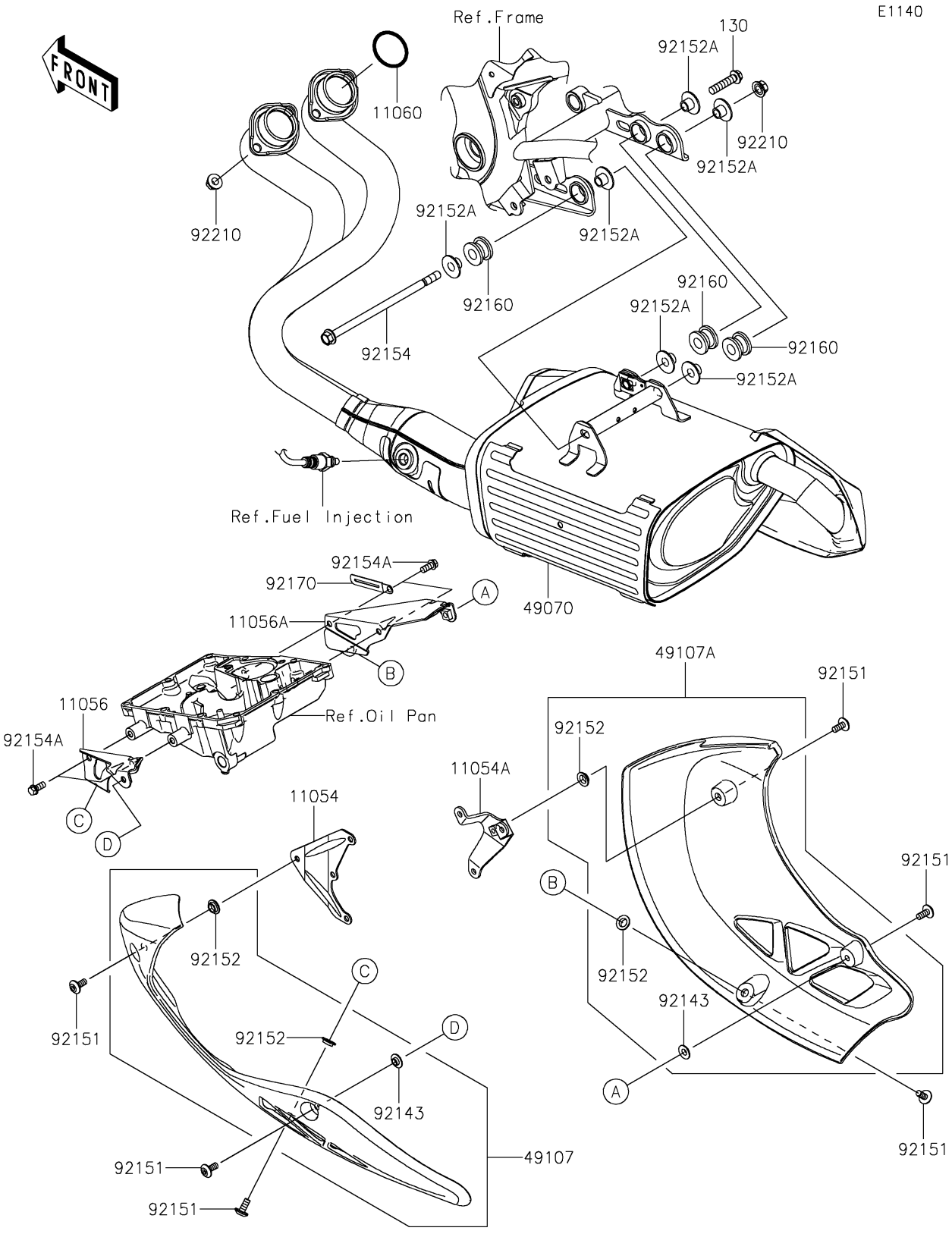

© 2026 Kawasaki Motors Corp., U.S.A.

2021 VERSYS® 650 ABS

PARTS LIST

Muffler(s)

ITEM NAME	PART NUMBER	QUANTITY
BRACKET,EX.COVER,UPP,LH (Ref # 11054)	11054-0420	1
BRACKET,EX.COVER,UPP,RH (Ref # 11054A)	11054-0421	1
BRACKET,EX.COVER,LWR,LH (Ref # 11056)	11056-3927	1
BRACKET,EX.COVER,LWR,RH (Ref # 11056A)	11056-4298	1
GASKET,EXHAUST PIPE HOLDER (Ref # 11060)	11060-1103	2
BOLT-FLANGED,8X35 (Ref # 130)	130CD0835	1
MUFFLER-COMP (Ref # 49070)	49070-0782	1
COVER-EXHAUST PIPE,LH,F.BLACK (Ref # 49107)	49107-0081-6Z	1
COVER-EXHAUST PIPE,RH,F.BLACK (Ref # 49107A)	49107-0082-6Z	1
COLLAR (Ref # 92143)	92143-1087	2
BOLT,SOCKET,6X14 (Ref # 92151)	92151-1654	6
COLLAR,8.8X11.2X4 (Ref # 92152)	92152-0909	4
COLLAR (Ref # 92152A)	92152-1692	6
BOLT,FLANGED,8X165 (Ref # 92154)	92154-0189	1
BOLT,FLANGED,6X14 (Ref # 92154A)	92154-0777	4
DAMPER,MUFFLER MOUNT (Ref # 92160)	92160-1116	3
CLAMP (Ref # 92170)	92170-1514	1
NUT,8MM (Ref # 92210)	92210-1114	5

© 2026 Kawasaki Motors Corp., U.S.A.