2021 Ninja® 650

PARTS DIAGRAM

Crankcase Bolt Pattern

E1412

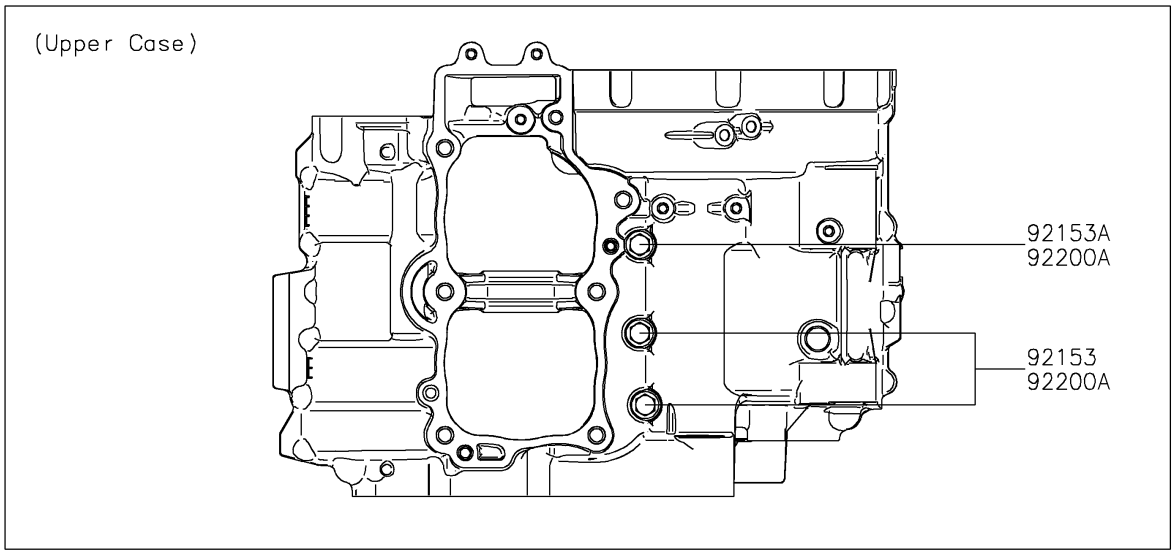

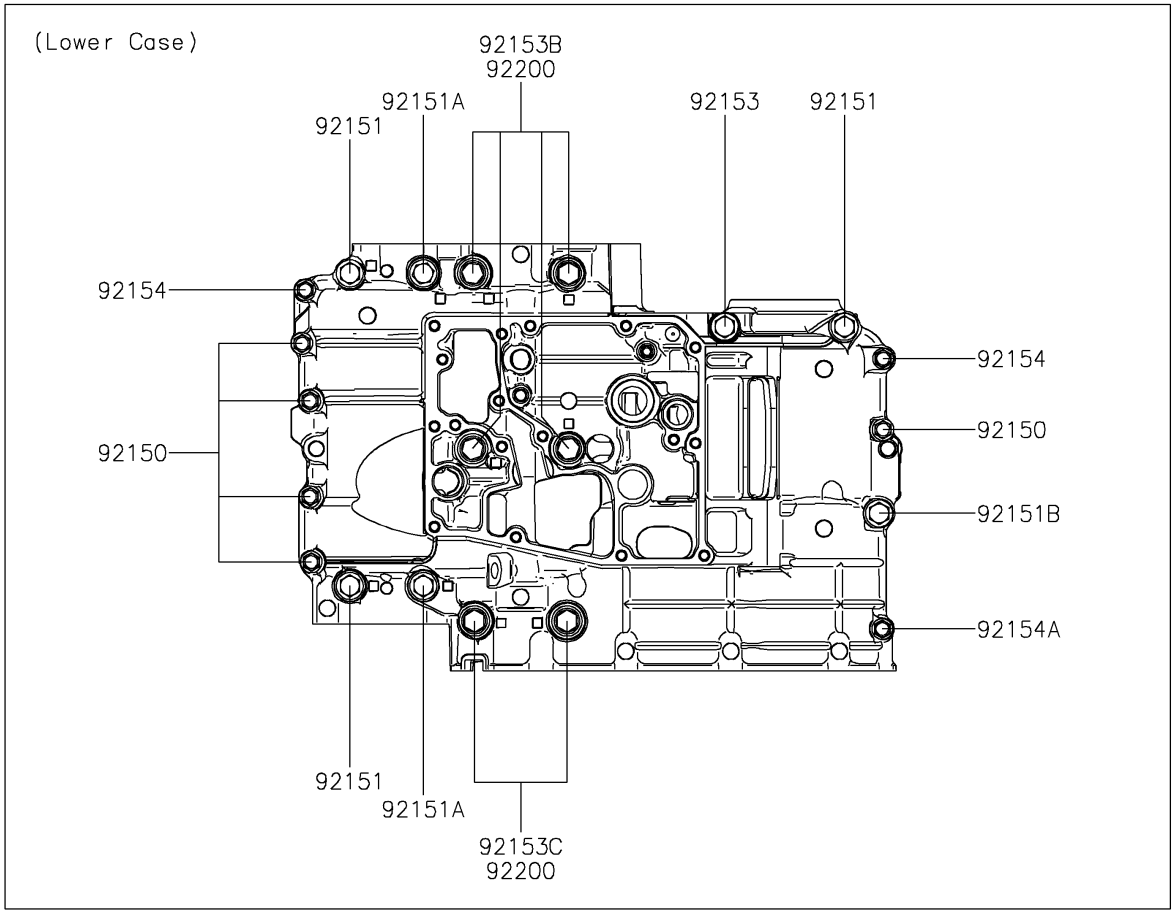

© 2026 Kawasaki Motors Corp., U.S.A.

2021 Ninja® 650

PARTS LIST

Crankcase Bolt Pattern

ITEM NAME	PART NUMBER	QUANTITY
BOLT,6X38 (Ref # 92150)	92150-1301	5
BOLT,8X60 (Ref # 92151)	92151-1461	3
BOLT,8X73 (Ref # 92151A)	92151-1462	2
BOLT,8X50 (Ref # 92151B)	92151-1463	1
BOLT,FLANGED,8X110 (Ref # 92153)	92153-0959	3
BOLT,FLANGED,8X120 (Ref # 92153A)	92153-0960	1
BOLT,FLANGED,9X113 (Ref # 92153B)	92153-1449	4
BOLT,FLANGED,9X83 (Ref # 92153C)	92153-1450	2
BOLT,FLANGED,6X45 (Ref # 92154)	92154-0966	2
BOLT,FLANGED,6X32 (Ref # 92154A)	92154-0967	1
WASHER,9.2X19X2.3 (Ref # 92200)	92200-0115	6
WASHER,8.5X16X1.2 (Ref # 92200A)	92200-1063	3

© 2026 Kawasaki Motors Corp., U.S.A.