2021 Z125 PRO

PARTS DIAGRAM

Fuel Pump

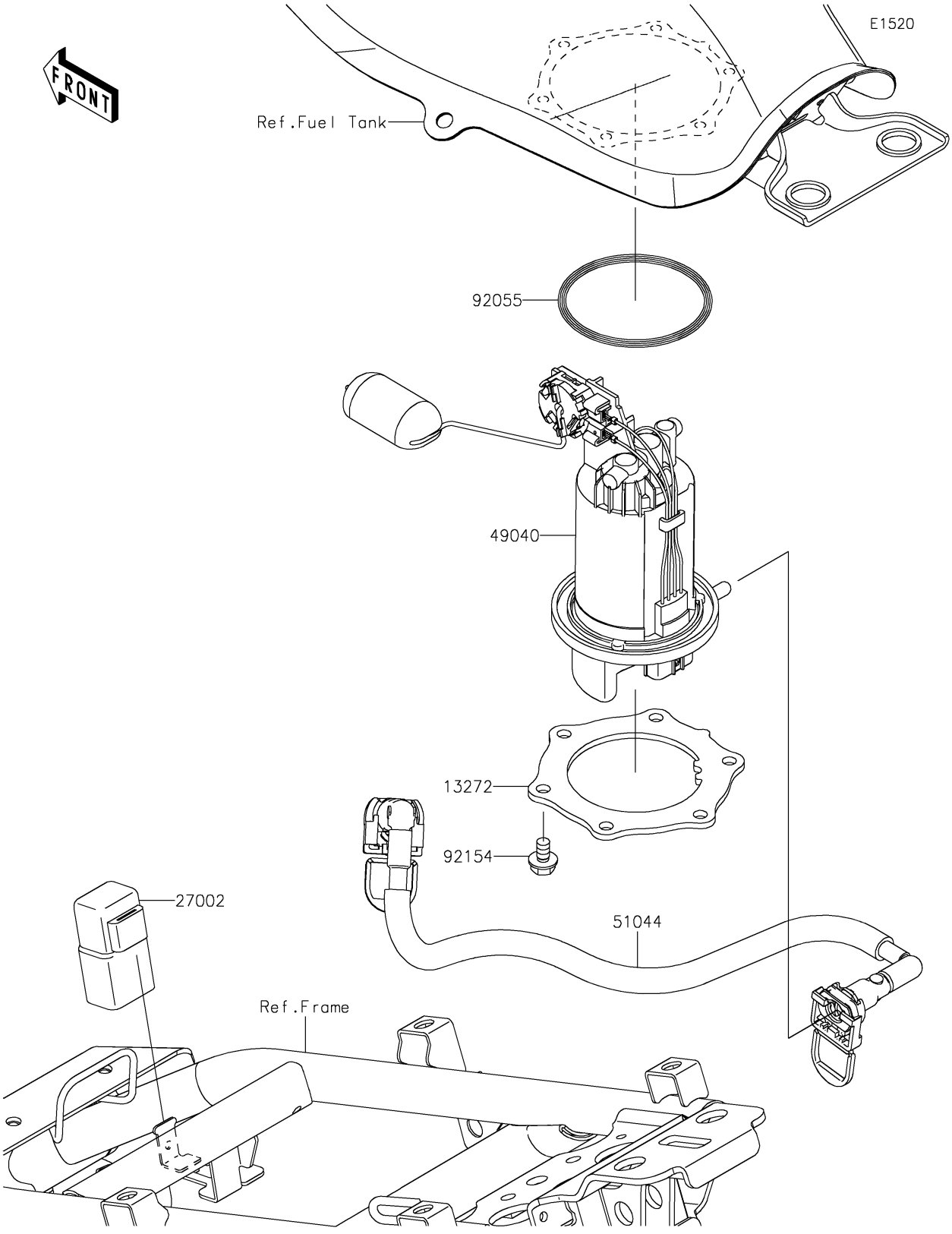

© 2026 Kawasaki Motors Corp., U.S.A.

2021 Z125 PRO

PARTS LIST

Fuel Pump

ITEM NAME	PART NUMBER	QUANTITY
PLATE,FUEL PUMP (Ref # 13272)	13272-1957	1
RELAY-ASSY (Ref # 27002)	27002-1086	1
PUMP-FUEL (Ref # 49040)	49040-0774	1
TUBE-ASSY (Ref # 51044)	51044-0805	1
RING-O,66.6X3.5 (Ref # 92055)	92055-0838	1
BOLT,FLANGED,6X12 (Ref # 92154)	92154-2335	6

© 2026 Kawasaki Motors Corp., U.S.A.