2021 KLX®230

PARTS DIAGRAM

Crankshaft

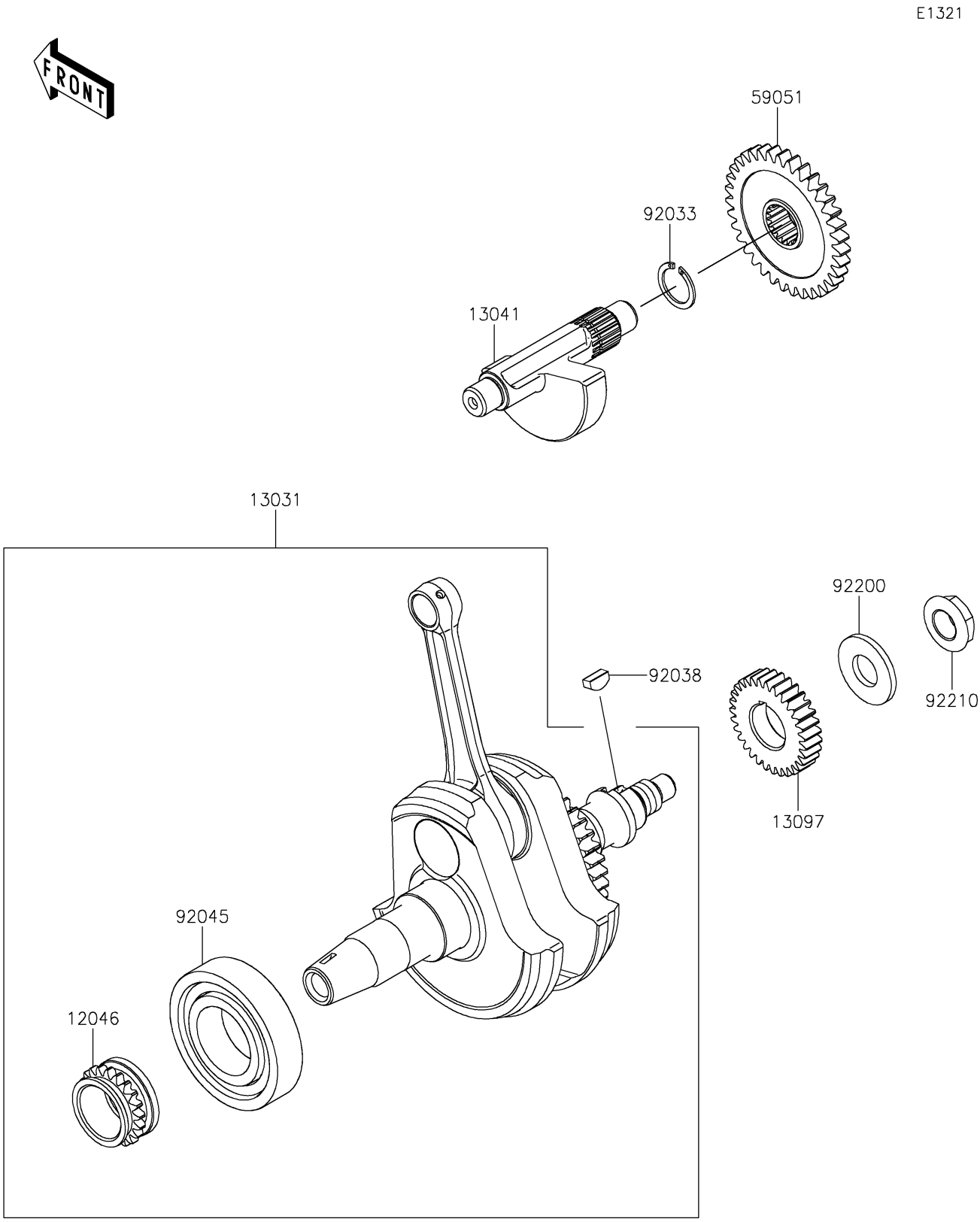

© 2026 Kawasaki Motors Corp., U.S.A.

2021 KLX®230

PARTS LIST

Crankshaft

ITEM NAME	PART NUMBER	QUANTITY
SPROCKET,21T (Ref # 12046)	12046-0613	1
CRANKSHAFT-COMP (Ref # 13031)	13031-0908	1
BALANCER (Ref # 13041)	13041-0571	1
GEAR-PRIMARY SPUR,31T (Ref # 13097)	13097-0603	1
GEAR-SPUR,BALANCER,DRIVEN,35T (Ref # 59051)	59051-0838	1
RING-SNAP,18MM (Ref # 92033)	92033-029	1
KEY (Ref # 92038)	92038-1057	1
BEARING-BALL,6207CS17 (Ref # 92045)	92045-0906	1
WASHER,16.3X35X3.2 (Ref # 92200)	92200-0119	1
NUT,16MM (Ref # 92210)	92210-1538	1

© 2026 Kawasaki Motors Corp., U.S.A.