2020 CONCOURS®14 ABS

PARTS DIAGRAM

Turn Signals

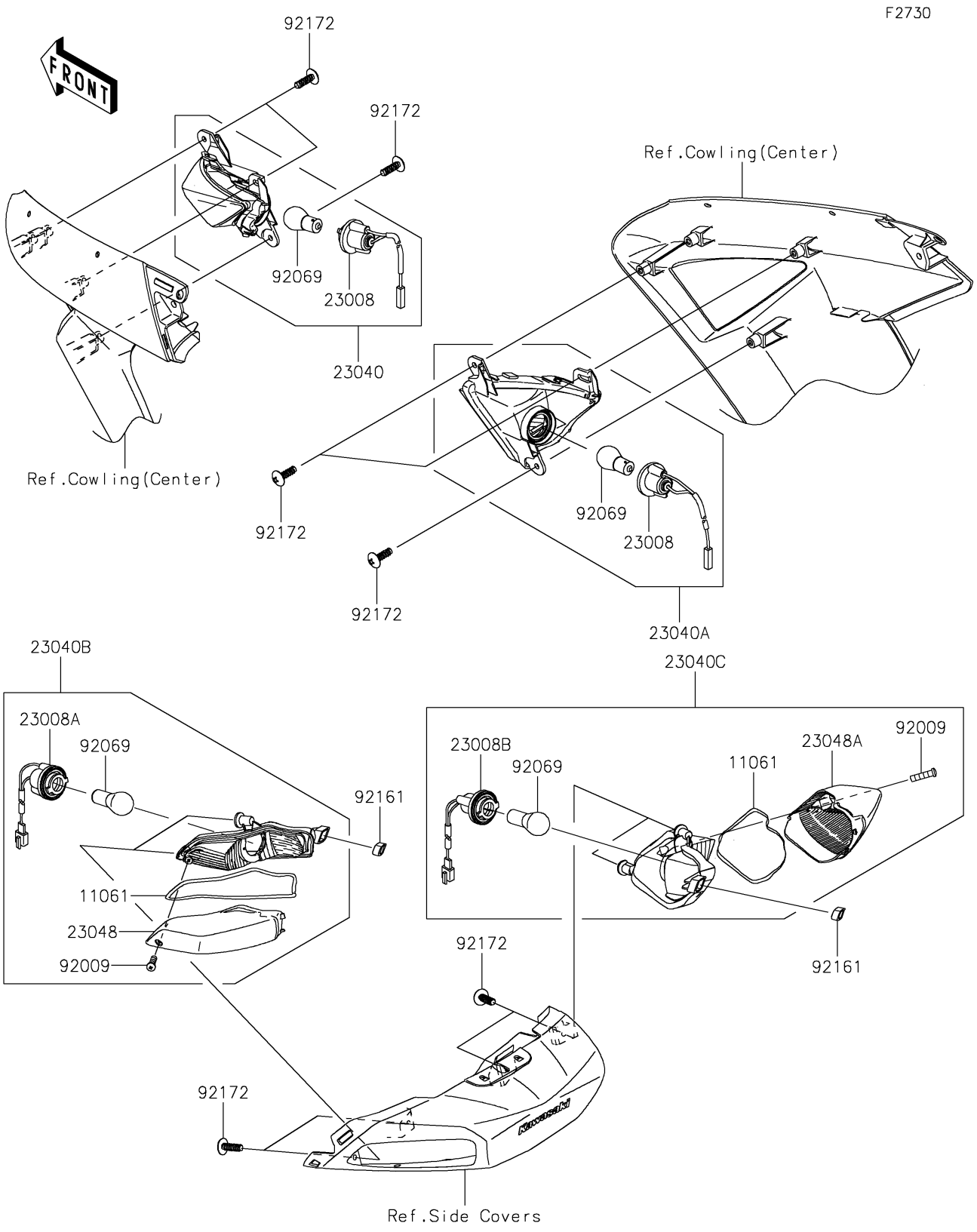

© 2026 Kawasaki Motors Corp., U.S.A.

2020 CONCOURS®14 ABS

PARTS LIST

Turn Signals

ITEM NAME	PART NUMBER	QUANTITY
GASKET,SIGNAL LAMP (Ref # 11061)	11061-0286	2
SOCKET-ASSY,SIGNAL LAMP,FR (Ref # 23008)	23008-0044	2
SOCKET-ASSY,SIGNAL LAMP,RR,LH (Ref # 23008A)	23008-0069	1
SOCKET-ASSY,SIGNAL LAMP,RR,RH (Ref # 23008B)	23008-0070	1
LAMP-SIGNAL,FR,LH (Ref # 23040)	23040-0057	1
LAMP-SIGNAL,FR,RH (Ref # 23040A)	23040-0058	1
LAMP-SIGNAL,RR,LH (Ref # 23040B)	23040-0079	1
LAMP-SIGNAL,RR,RH (Ref # 23040C)	23040-0080	1
LENS-SIGNAL LAMP,RR,LH (Ref # 23048)	23048-0021	1
LENS-SIGNAL LAMP,RR,RH (Ref # 23048A)	23048-0022	1
SCREW,TAPPING,4X16 (Ref # 92009)	92009-1912	2
BULB,12V 21W (Ref # 92069)	92069-1125	4
DAMPER (Ref # 92161)	92161-0436	2
SCREW,TAPPING,5X16 (Ref # 92172)	92172-0238	10

© 2026 Kawasaki Motors Corp., U.S.A.