2020 CONCOURS®14 ABS

PARTS DIAGRAM

Rear Master Cylinder

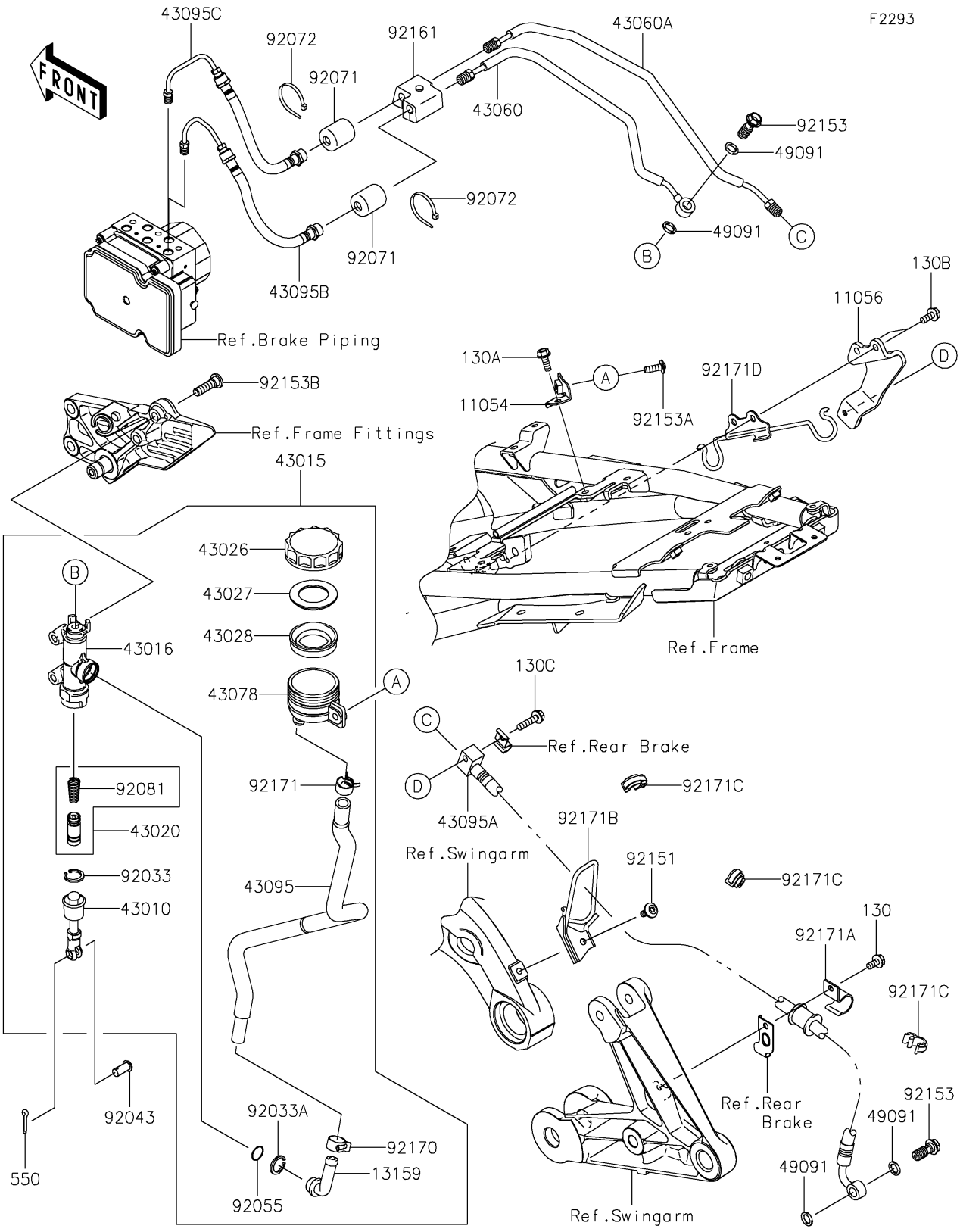

© 2026 Kawasaki Motors Corp., U.S.A.

2020 CONCOURS®14 ABS

PARTS LIST

Rear Master Cylinder

ITEM NAME	PART NUMBER	QUANTITY
BRACKET,RESERVOIR TANK,RR (Ref # 11054)	11054-1915	1
BRACKET,HOSE JOINT,RR (Ref # 11056)	11056-0037	1
BOLT-FLANGED,6X12 (Ref # 130)	130BA0612	1
BOLT-FLANGED,6X16 (Ref # 130A)	130BA0616	1
BOLT-FLANGED,6X14 (Ref # 130B)	130BB0614	2
BOLT-FLANGED,6X25 (Ref # 130C)	130BB0625	1
CONNECTOR (Ref # 13159)	13159-1056	1
ROD-ASSY-BRAKE (Ref # 43010)	43010-0018	1
CYLINDER-ASSY-MASTER,RR (Ref # 43015)	43015-0629	1
CYLINDER-MASTER,RR (Ref # 43016)	43016-1122	1
PISTON-COMP-BRAKE (Ref # 43020)	43020-1057	1
CAP-BRAKE (Ref # 43026)	43026-1051	1
PLATE-DIAPHRAGM (Ref # 43027)	43027-1051	1
DIAPHRAGM,MASTER CYLINDER (Ref # 43028)	43028-1057	1
PIPE-BRAKE,HU-RR M/CYLINDER (Ref # 43060)	43060-0074	1
PIPE-BRAKE,HU-RR CALIPER,JNT. (Ref # 43060A)	43060-0075	1
RESERVOIR,RR MASTER CYLINDER (Ref # 43078)	43078-1082	1
HOSE-BRAKE,RR,MASTER CYLINDER (Ref # 43095)	43095-0334	1
HOSE-BRAKE,HU-RR CALIPER (Ref # 43095A)	43095-0498	1
HOSE-BRAKE,HU-RR M/CYLINDER (Ref # 43095B)	43095-0561	1
HOSE-BRAKE,HU-RR CALIPER (Ref # 43095C)	43095-0562	1
WASHER-SEAL,10.1X14.5X1.5 (Ref # 49091)	49091-0001	4
RING-SNAP,20.9X24.6X1.2 (Ref # 92033)	92033-0079	1
RING-SNAP,20.5MM (Ref # 92033A)	92033-1186	1
PIN,8X17 (Ref # 92043)	92043-0104	1
RING-O,14.8X2.4 (Ref # 92055)	92055-0741	1
GROMMET (Ref # 92071)	92071-1143	2
BAND,L=148 (Ref # 92072)	92072-3768	2
SPRING,MASTER CYLINDER (Ref # 92081)	92081-1737	1

© 2026 Kawasaki Motors Corp., U.S.A.

2020 CONCOURS®14 ABS

PARTS LIST

Rear Master Cylinder

ITEM NAME	PART NUMBER	QUANTITY
BOLT,SOCKET,6X14 (Ref # 92151)	92151-1654	1
BOLT,OIL,L=23 (Ref # 92153)	92153-0627	2
BOLT,6X18 (Ref # 92153A)	92153-0756	1
BOLT,SOCKET,8X30 (Ref # 92153B)	92153-1624	2
DAMPER,HOSE CLAMP (Ref # 92161)	92161-0314	1
CLAMP,HOSE (Ref # 92170)	92170-1091	1
CLAMP,HOSE (Ref # 92171)	92171-0463	1
CLAMP,BRAKE HOSE (Ref # 92171A)	92171-0880	1
CLAMP,BRAKE HOSE (Ref # 92171B)	92171-1713	1
CLAMP,BRAKE HOSE (Ref # 92171C)	92171-1819	3
CLAMP,RESERVE TANK HOSE (Ref # 92171D)	92171-1935	1
PIN-COTTER,2.0X15 (Ref # 550)	550AA2015	1

© 2026 Kawasaki Motors Corp., U.S.A.