2020 CONCOURS®14 ABS

PARTS DIAGRAM

Frame

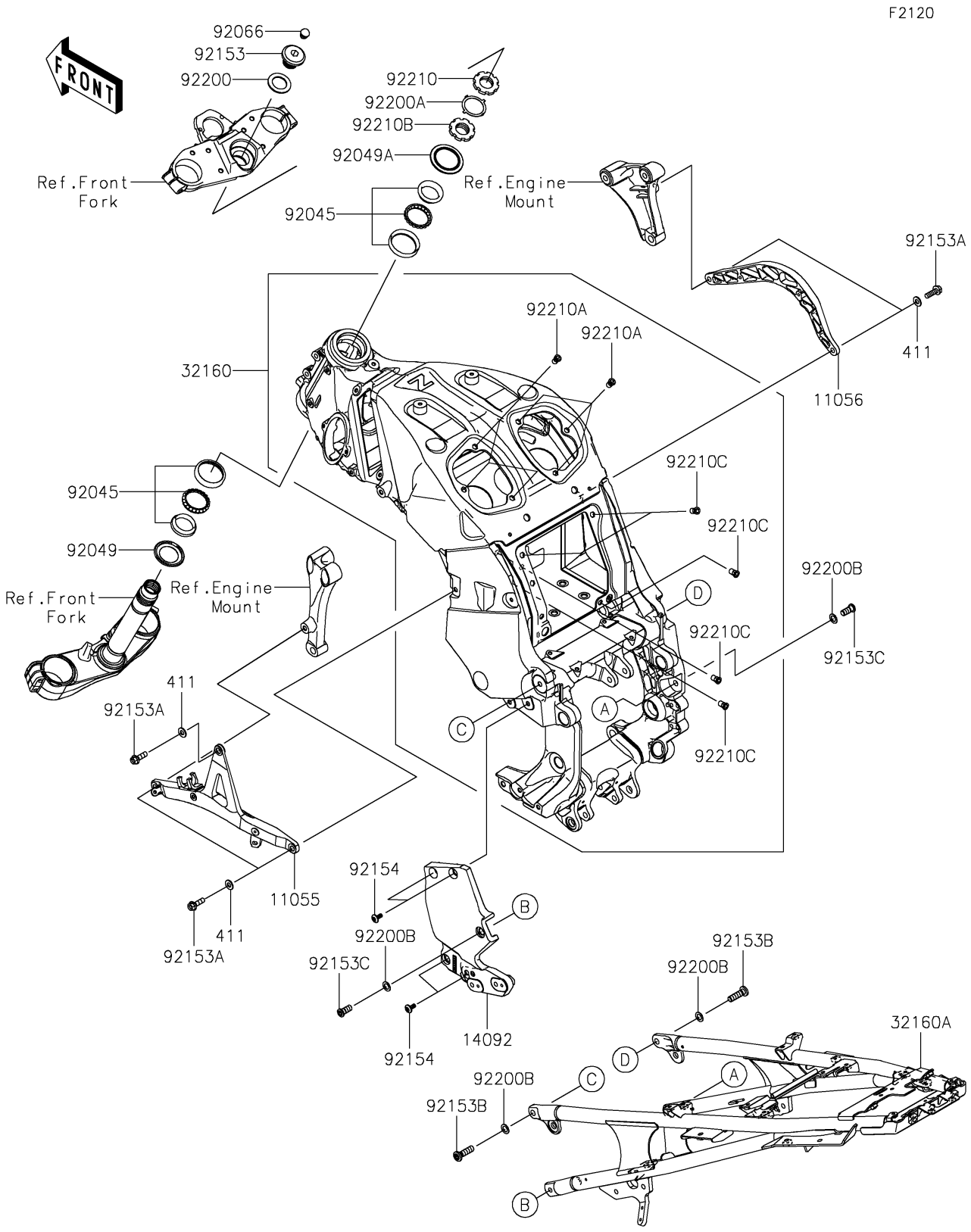

© 2026 Kawasaki Motors Corp., U.S.A.

2020 CONCOURS®14 ABS

PARTS LIST

Frame

ITEM NAME	PART NUMBER	QUANTITY
BRACKET,SUB FRAME,LH (Ref # 11055)	11055-1755	1
BRACKET,SUB FRAME,RH (Ref # 11056)	11056-0038	1
COVER,FRONT FRAME SHAFT,BLACK (Ref # 14092)	14092-0089-18R	1
FRAME-COMP,FR (Ref # 32160)	32160-0767	1
FRAME-COMP,RR (Ref # 32160A)	32160-0775	1
WASHER-PLAIN,8MM (Ref # 411)	411AA0800	5
BEARING-BALL,SF07A17PX1V1 (Ref # 92045)	92045-1384	2
SEAL-OIL,DS35X55X4 (Ref # 92049)	92049-0022	1
SEAL-OIL,43X55.5X8.6 (Ref # 92049A)	92049-0742	1
PLUG (Ref # 92066)	92066-0071	1
BOLT,26MM (Ref # 92153)	92153-0474	1
BOLT,FLANGED,8X25 (Ref # 92153A)	92153-1768	5
BOLT,SOCKET,10X35 (Ref # 92153B)	92153-1904	2
BOLT,SOCKET,10X22 (Ref # 92153C)	92153-1905	2
BOLT,SOCKET8X20 (Ref # 92154)	92154-1711	4
WASHER,27X42X2.3 (Ref # 92200)	92200-0081	1
WASHER (Ref # 92200A)	92200-0281	1
WASHER,11X18X1 (Ref # 92200B)	92200-0324	4
NUT,35MM (Ref # 92210)	92210-0095	1
NUT,POP,6MM,L=16.5 (Ref # 92210A)	92210-0324	6
NUT,35MM (Ref # 92210B)	92210-0823	1
NUT,POP,6MM,L=15 (Ref # 92210C)	92210-1397	7

© 2026 Kawasaki Motors Corp., U.S.A.