2020 CONCOURS®14 ABS

PARTS DIAGRAM

Fuel Pump

E1520

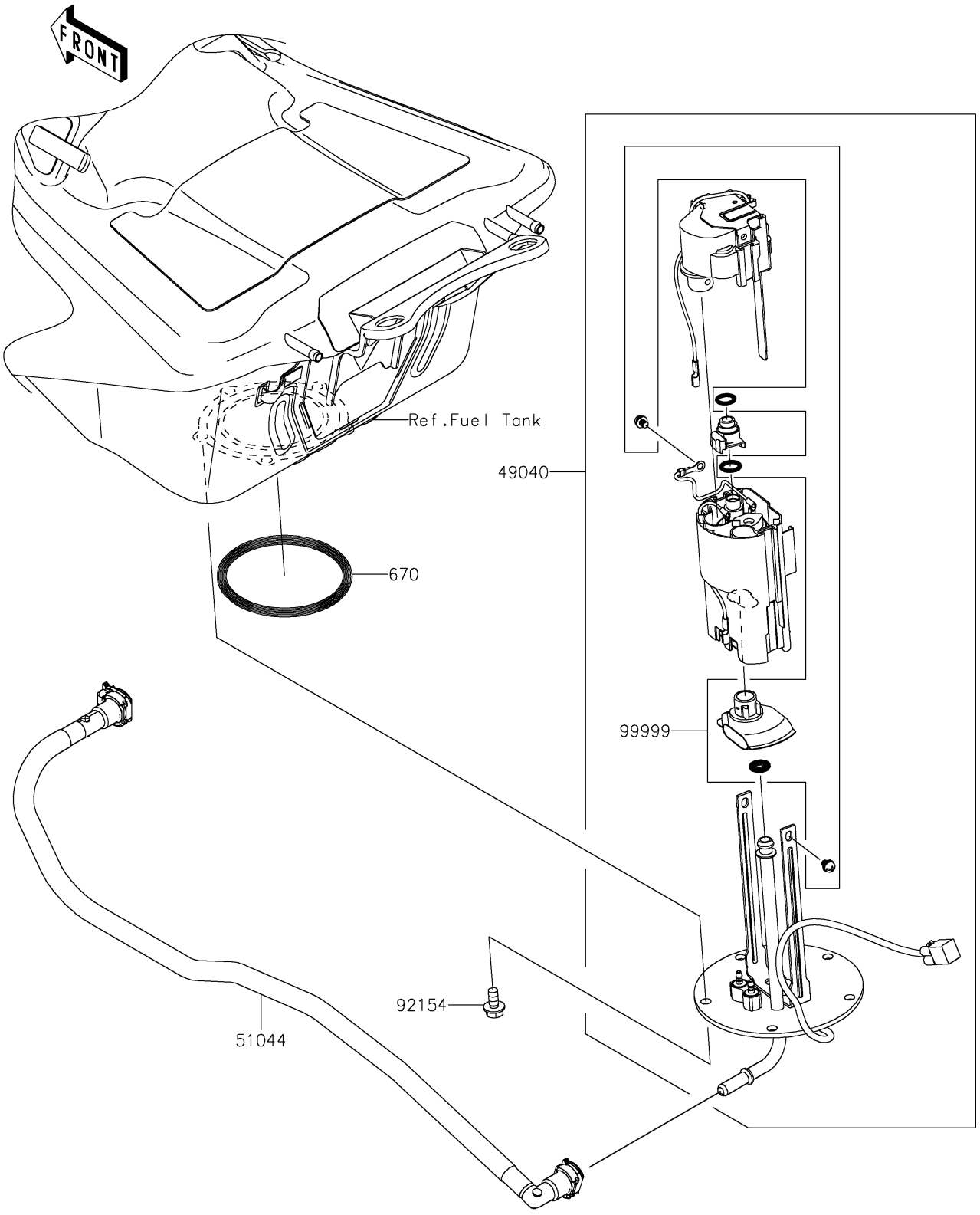

© 2026 Kawasaki Motors Corp., U.S.A.

2020 CONCOURS®14 ABS

PARTS LIST

Fuel Pump

ITEM NAME	PART NUMBER	QUANTITY
PUMP-FUEL (Ref # 49040)	49040-0024	1
TUBE-ASSY (Ref # 51044)	51044-0816	1
O RING (Ref # 670)	670E5075	1
BOLT,FLANGED,6X12 (Ref # 92154)	92154-1848	5
KIT,FUEL FILTER (Ref # 99999)	99999-0521	1

© 2026 Kawasaki Motors Corp., U.S.A.