2020 CONCOURS®14 ABS

PARTS DIAGRAM

Air Cleaner

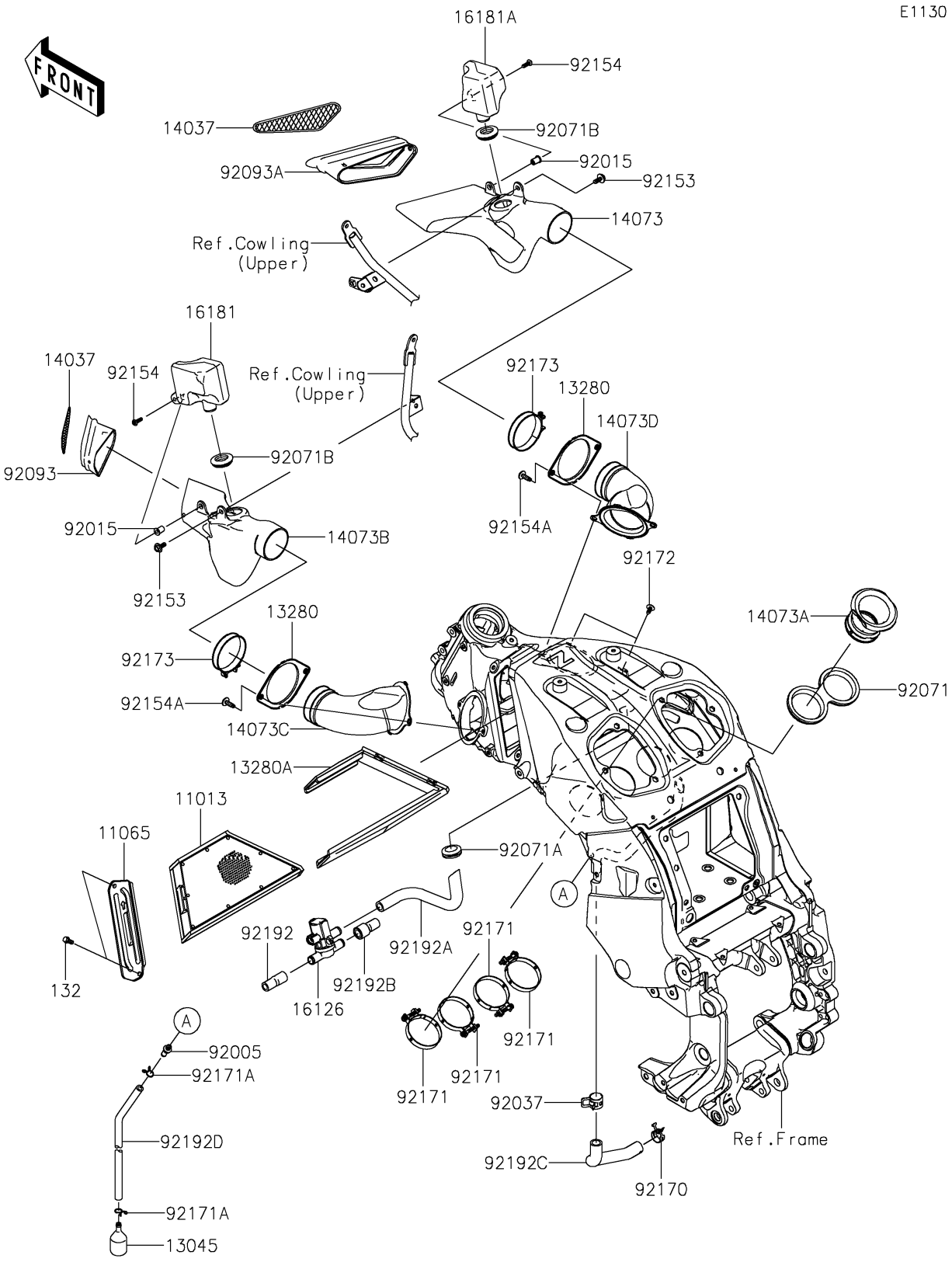

© 2026 Kawasaki Motors Corp., U.S.A.

2020 CONCOURS®14 ABS

PARTS LIST

Air Cleaner

ITEM NAME	PART NUMBER	QUANTITY
ELEMENT-AIR FILTER (Ref # 11013)	11013-0014	1
CAP (Ref # 11065)	11065-0367	1
RECEIVER-OIL (Ref # 13045)	13045-1057	1
BOLT-FLANGED-SMALL,6X14 (Ref # 132)	132BA0614	2
HOLDER (Ref # 13280)	13280-0154	2
HOLDER,ELEMENT (Ref # 13280A)	13280-0165	1
SCREEN (Ref # 14037)	14037-0060	2
DUCT,RAM,RH (Ref # 14073)	14073-0145	1
DUCT,FUNNEL (Ref # 14073A)	14073-0168	4
DUCT,RAM,LH (Ref # 14073B)	14073-0289	1
DUCT,RAM FRAME,LH (Ref # 14073C)	14073-0844	1
DUCT,RAM FRAME,RH (Ref # 14073D)	14073-0845	1
VALVE,AIR SWITCHING (Ref # 16126)	16126-0745	1
TANK-RESONATOR,LH (Ref # 16181)	16181-0008	1
TANK-RESONATOR,RH (Ref # 16181A)	16181-0009	1
FITTING (Ref # 92005)	92005-0055	1
NUT,WELL,5MM (Ref # 92015)	92015-1757	2
CLAMP,HOSE CLIP (Ref # 92037)	92037-1460	1
GROMMET (Ref # 92071)	92071-0023	2
GROMMET,AIR FILTER (Ref # 92071A)	92071-1042	1
GROMMET (Ref # 92071B)	92071-1259	2
SEAL,DUCT,LH (Ref # 92093)	92093-0069	1
SEAL,DUCT,RH (Ref # 92093A)	92093-0077	1
BOLT,UPSET-WP,6X16 (Ref # 92153)	92153-1587	2
BOLT,SOCKET,5X16 (Ref # 92154)	92154-0209	2
BOLT,SOCKET,6X20 (Ref # 92154A)	92154-1833	4
CLAMP (Ref # 92170)	92170-1060	1
CLAMP (Ref # 92171)	92171-0677	4
CLAMP (Ref # 92171A)	92171-0721	2

© 2026 Kawasaki Motors Corp., U.S.A.

2020 CONCOURS®14 ABS

PARTS LIST

Air Cleaner

ITEM NAME	PART NUMBER	QUANTITY
SCREW,6X16 (Ref # 92172)	92172-0284	2
CLAMP,65MM (Ref # 92173)	92173-0080	2
TUBE,REED VALVE-ASV (Ref # 92192)	92192-0376	1
TUBE,ASV-FRAME (Ref # 92192A)	92192-0399	1
TUBE,ASV CAP (Ref # 92192B)	92192-0408	1
TUBE,BREATHER (Ref # 92192C)	92192-0701	1
TUBE,7X12X250 (Ref # 92192D)	92192-0863	1

© 2026 Kawasaki Motors Corp., U.S.A.