2020 KLX®230

PARTS DIAGRAM

Seat

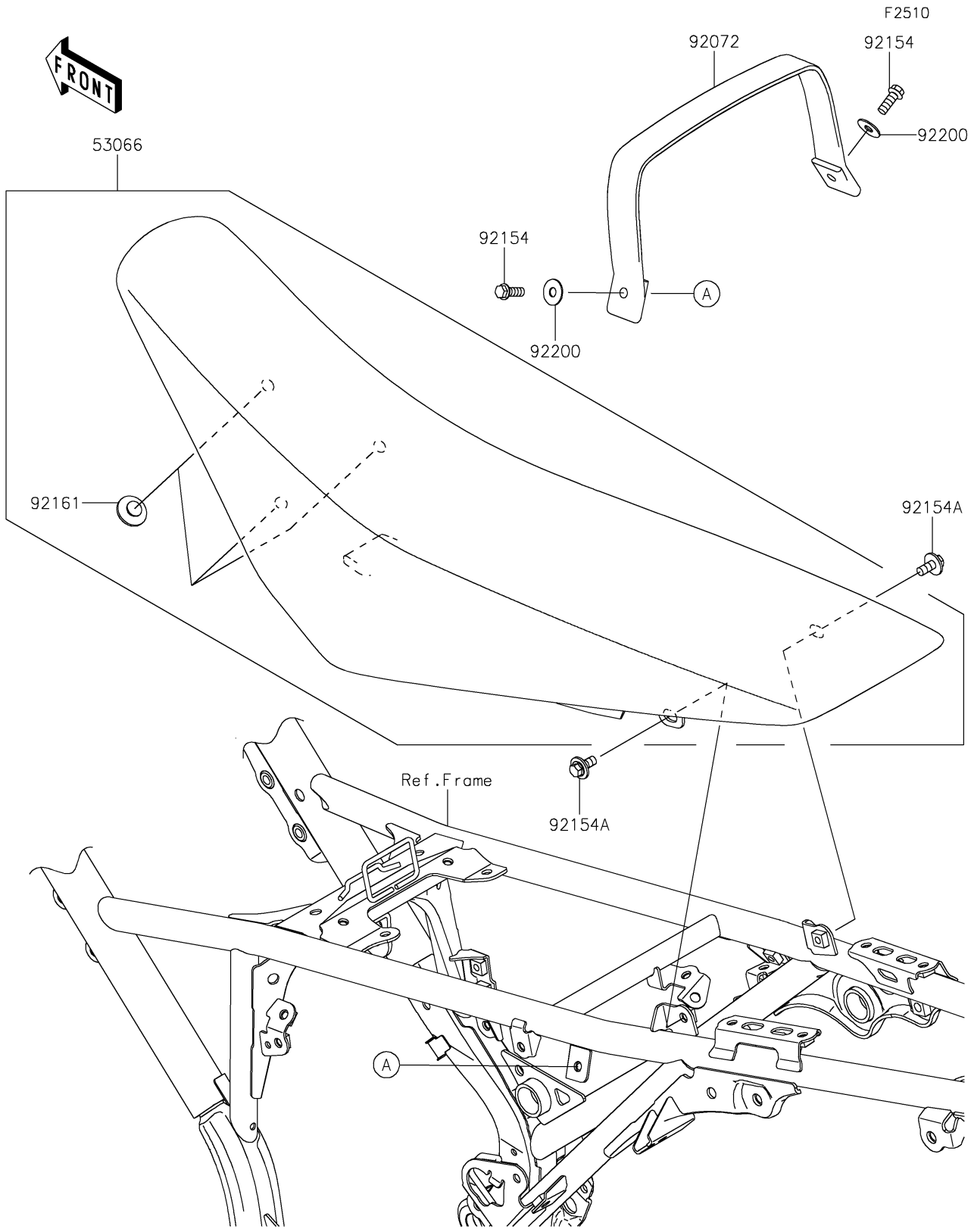

© 2026 Kawasaki Motors Corp., U.S.A.

2020 KLX®230

PARTS LIST

Seat

ITEM NAME	PART NUMBER	QUANTITY
SEAT-ASSY,BLACK (Ref # 53066)	53066-0692-MA	1
BAND,BLACK (Ref # 92072)	92072-0837-MA	1
BOLT,FLANGED,6X16 (Ref # 92154)	92154-0460	2
BOLT,FLANGED,6X14 (Ref # 92154A)	92154-1231	2
DAMPER,8X22X10 (Ref # 92161)	92161-1685	3
WASHER,6.5X18X1 (Ref # 92200)	92200-0544	2

© 2026 Kawasaki Motors Corp., U.S.A.