2017 Versys-X 300 ABS

PARTS DIAGRAM

Cowling Lowers

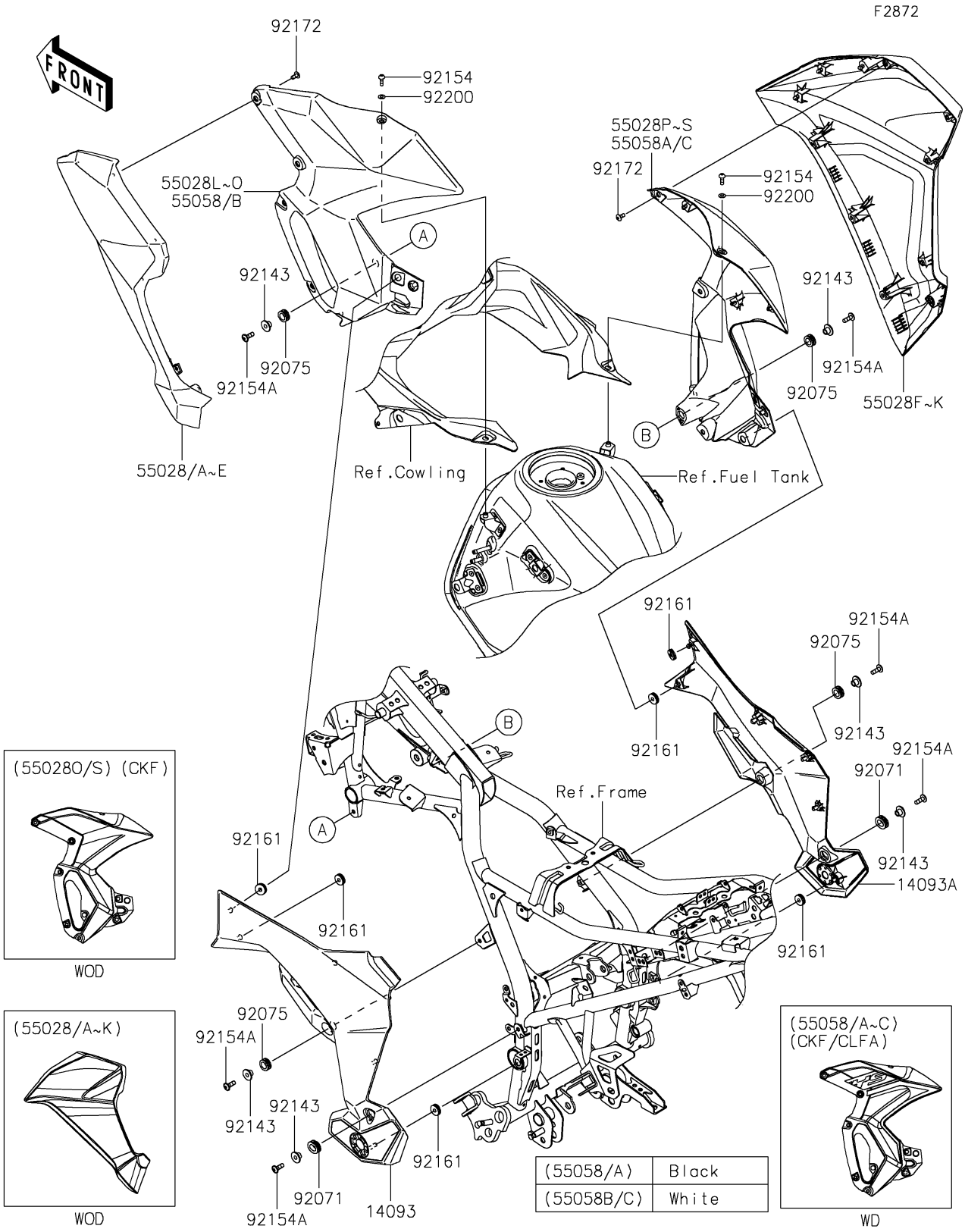

© 2026 Kawasaki Motors Corp., U.S.A.

2017 Versys-X 300 ABS

PARTS LIST

Cowling Lowers

ITEM NAME	PART NUMBER	QUANTITY
COVER,PIVOT,LH (Ref # 14093)	14093-0558	1
COVER,PIVOT,RH (Ref # 14093A)	14093-0559	1
COWLING,SIDE,LH,M.G.GRAY (Ref # 55028A)	55028-0626-45W	1
COWLING,SIDE,LH,C.L.GREEN (Ref # 55028B)	55028-0626-51P	1
COWLING,SIDE,RH,M.G.GRAY (Ref # 55028G)	55028-0627-45W	1
COWLING,SIDE,RH,C.L.GREEN (Ref # 55028H)	55028-0627-51P	1
COWLING,TANK SIDE,LH,F.EBONY (Ref # 55028M)	55028-0628-45L	1
COWLING,TANK SIDE,LH,M.G.GRAY (Ref # 55028N)	55028-0628-45W	1
COWLING,TANK SIDE,RH,F.EBONY (Ref # 55028Q)	55028-0629-45L	1
COWLING,TANK SIDE,RH,M.G.GRAY (Ref # 55028R)	55028-0629-45W	1
GROMMET,20X24X8 (Ref # 92071)	92071-0768	2
DAMPER (Ref # 92075)	92075-1634	4
COLLAR,L=9.6 (Ref # 92143)	92143-1016	6
BOLT,SOCKET,5X16 (Ref # 92154)	92154-0209	2
BOLT,SOCKET,6X18 (Ref # 92154A)	92154-2340	6
DAMPER,6X19X5.6 (Ref # 92161)	92161-1911	6
SCREW,5X12 (Ref # 92172)	92172-0821	10
WASHER,NYLONE,5.3X11.5X0.5 (Ref # 92200)	92200-0006	2

© 2026 Kawasaki Motors Corp., U.S.A.