2017 Versys-X 300 ABS

PARTS DIAGRAM

Crankcase Bolt Pattern

E1412

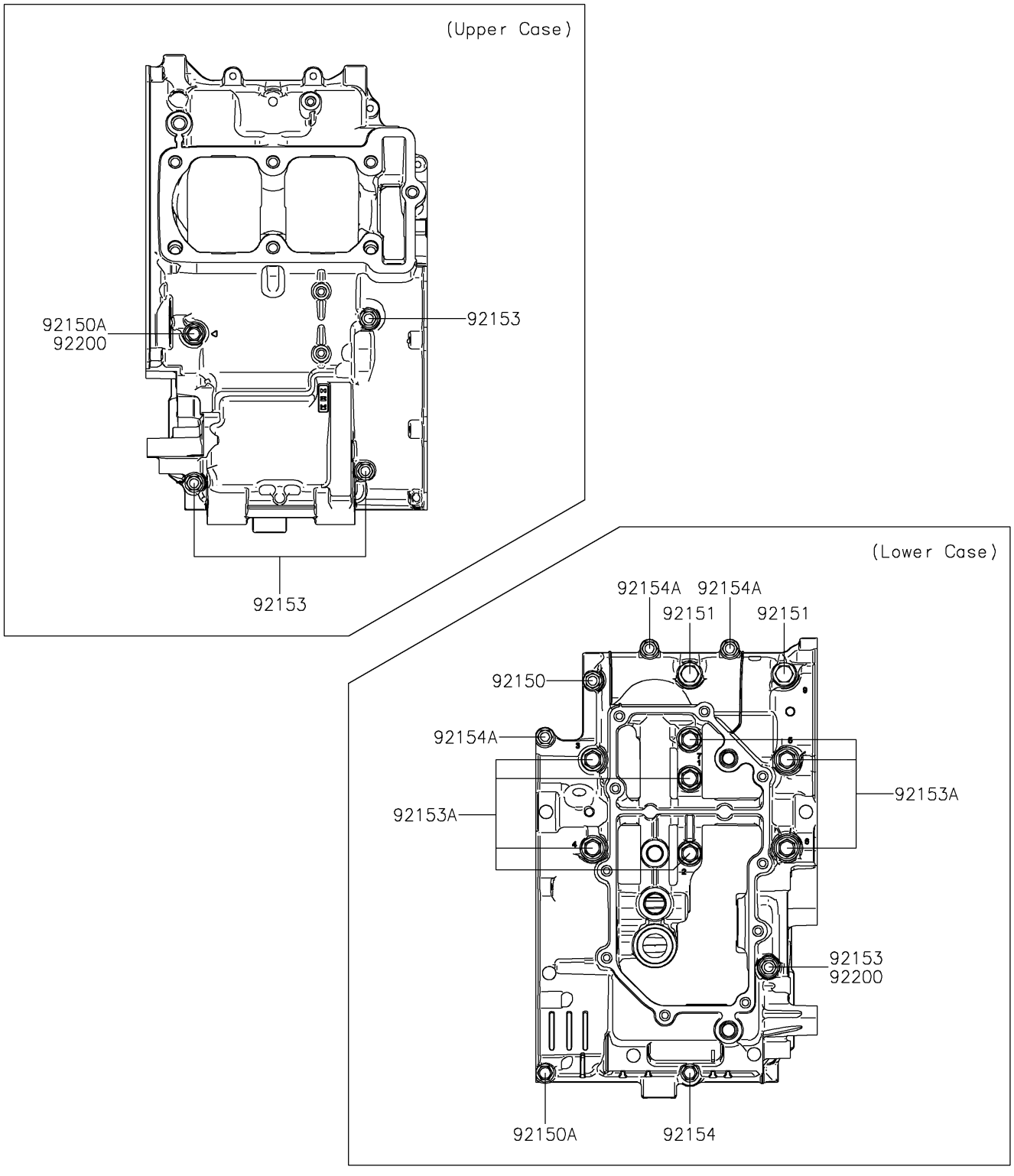

© 2026 Kawasaki Motors Corp., U.S.A.

2017 Versys-X 300 ABS

PARTS LIST

Crankcase Bolt Pattern

ITEM NAME	PART NUMBER	QUANTITY
BOLT,6X38 (Ref # 92150)	92150-1301	1
BOLT,6X60 (Ref # 92150A)	92150-1548	2
BOLT,8X73 (Ref # 92151)	92151-1462	2
BOLT,6X85,WHITE (Ref # 92153)	92153-0927	4
BOLT,FLANGED,8X90 (Ref # 92153A)	92153-1632	7
BOLT,FLANGED,6X135 (Ref # 92154)	92154-1189	1
BOLT,6X22 (Ref # 92154A)	92154-2832	3
WASHER,6.3X13.5X1 (Ref # 92200)	92200-0788	2

© 2026 Kawasaki Motors Corp., U.S.A.