2020 VULCAN® S ABS CAFE

PARTS DIAGRAM

Taillight(s)

F2720

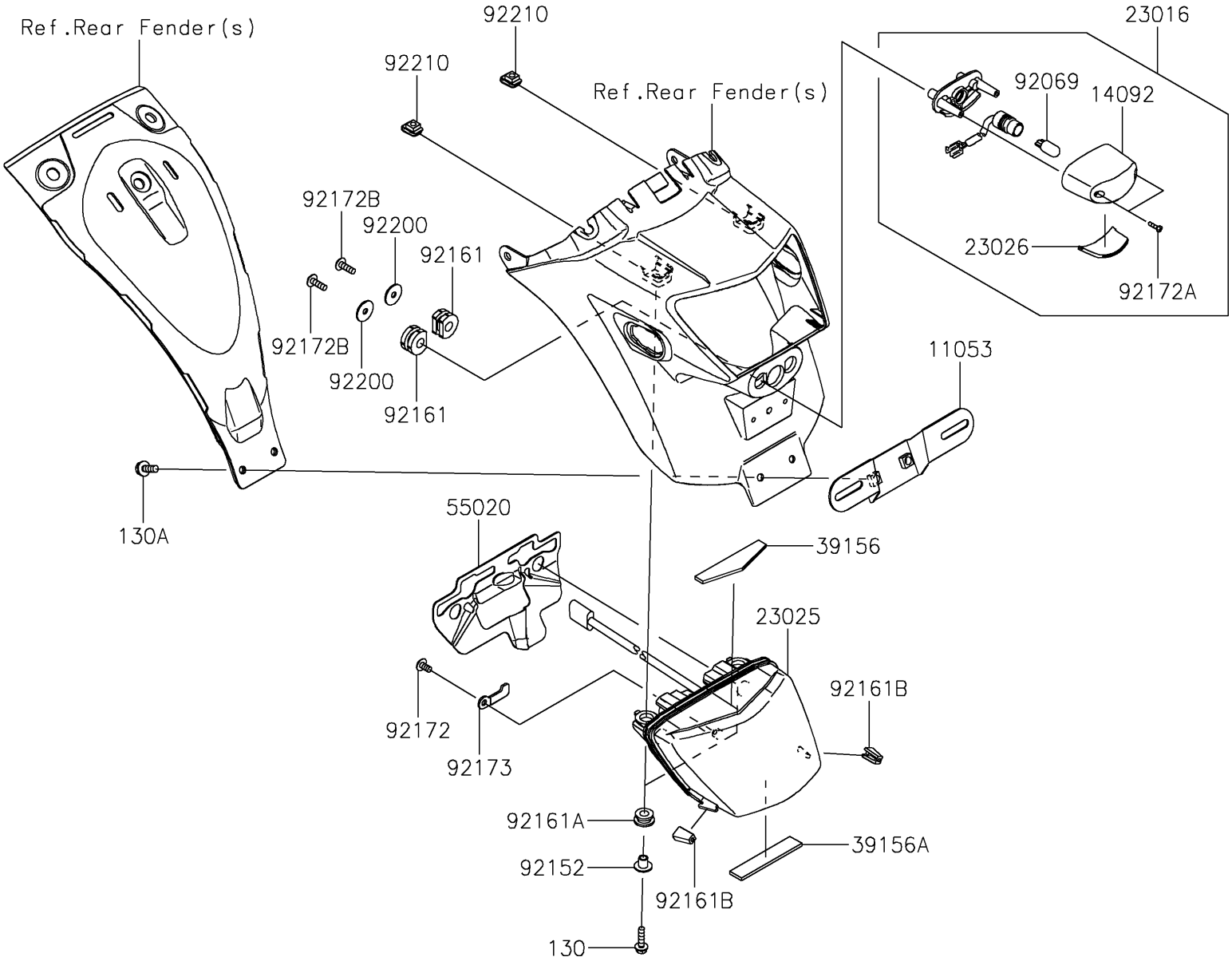

© 2026 Kawasaki Motors Corp., U.S.A.

2020 VULCAN® S ABS CAFE

PARTS LIST

Taillight(s)

ITEM NAME	PART NUMBER	QUANTITY
BRACKET,LICENSE (Ref # 11053)	11053-0400	1
BOLT-FLANGED,5X20 (Ref # 130)	130BA0520	2
BOLT-FLANGED,6X16 (Ref # 130A)	130BA0616	2
COVER,LICENSE LAMP (Ref # 14092)	14092-0001	1
LAMP-ASSY,LICENCE (Ref # 23016)	23016-0609	1
LAMP-TAIL,LED (Ref # 23025)	23025-0342	1
LENS,LICENCE LAMP (Ref # 23026)	23026-0028	1
PAD,20X80X3 (Ref # 39156)	39156-1869	1
PAD,15X76X3 (Ref # 39156A)	39156-1928	1
GUARD,TAIL LAMP (Ref # 55020)	55020-1882	1
BULB,12V 5W (Ref # 92069)	92069-1016	1
COLLAR (Ref # 92152)	92152-1592	2
DAMPER (Ref # 92161)	92161-0776	2
DAMPER,8X18X8.1 (Ref # 92161A)	92161-1369	2
DAMPER,TAIL LAMP (Ref # 92161B)	92161-1694	2
SCREW,TAPPING,5X10 (Ref # 92172)	92172-0262	1
SCREW,TAPPING,2.9X13 (Ref # 92172A)	92172-0343	2
SCREW,TAPPING,5X16 (Ref # 92172B)	92172-0427	2
CLAMP (Ref # 92173)	92173-1337	1
WASHER,5.5X20X1.2 (Ref # 92200)	92200-0284	2
NUT,PLATE,5MM (Ref # 92210)	92210-0935	2

© 2026 Kawasaki Motors Corp., U.S.A.