# 2019 VULCAN® S ABS CAFE

## PARTS DIAGRAM

### Front Master Cylinder

F2291

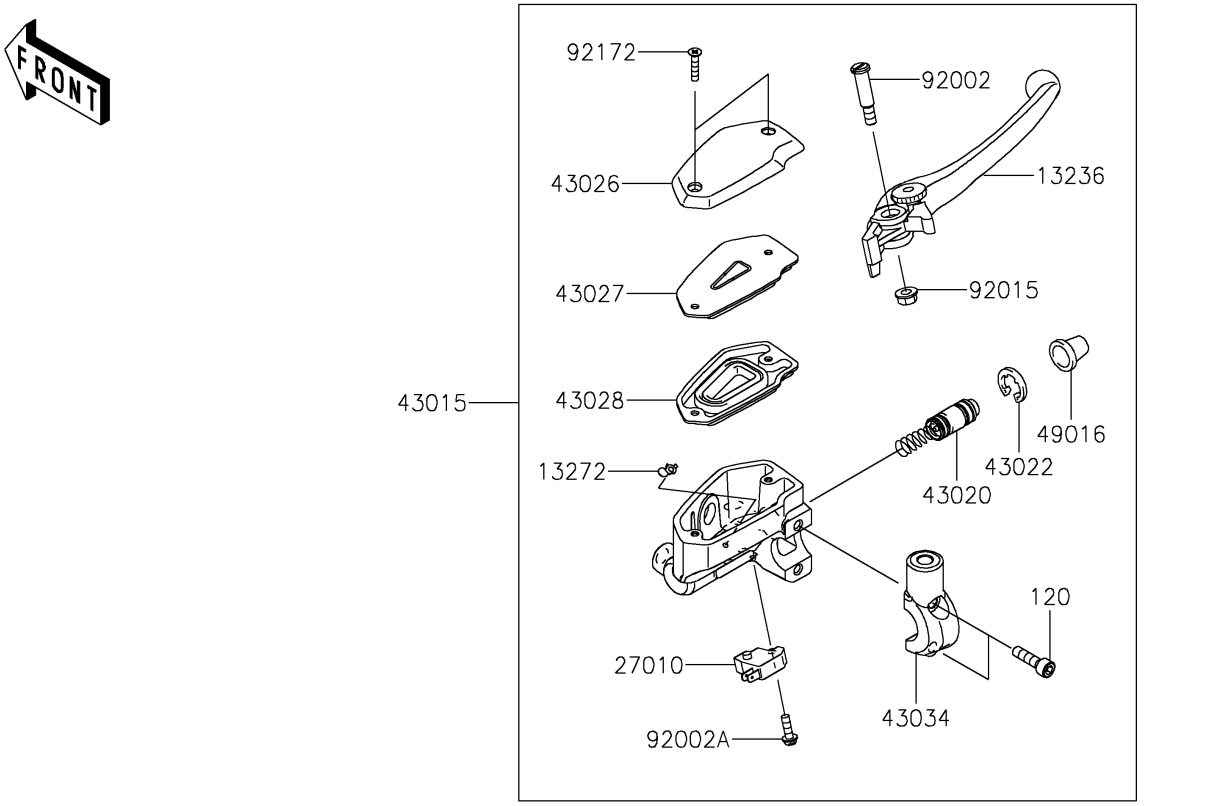


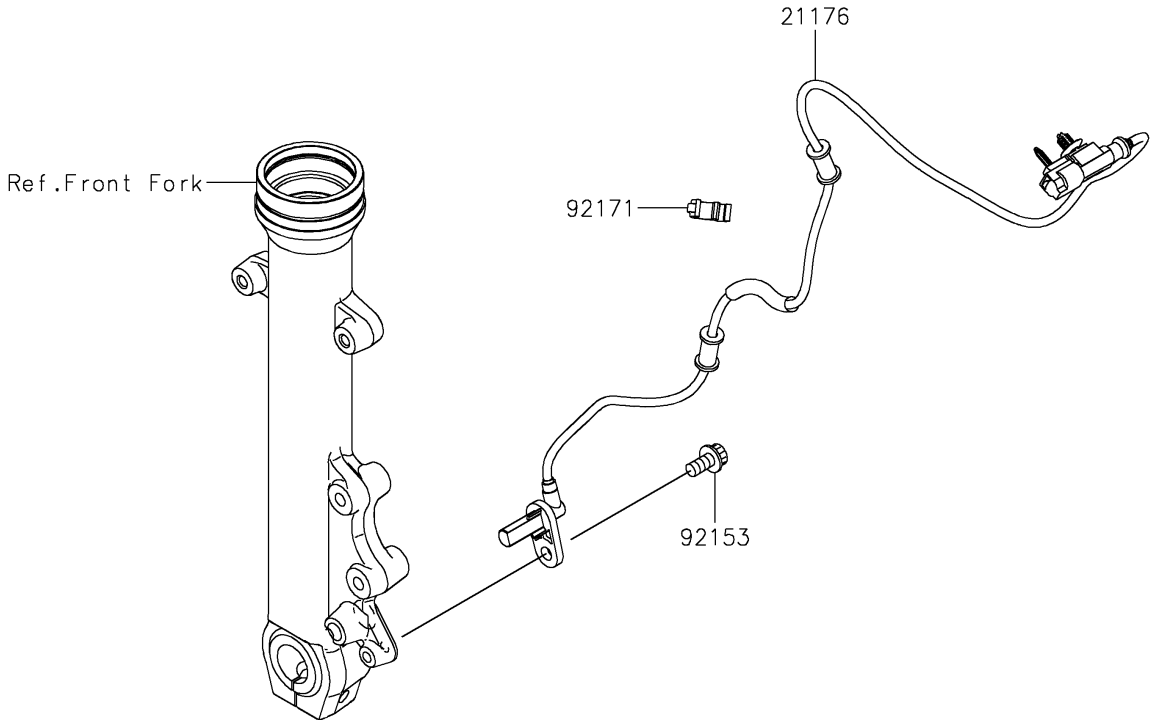


© 2026 Kawasaki Motors Corp., U.S.A.

# 2019 VULCAN® S ABS CAFE

## PARTS LIST

### Front Master Cylinder

| ITEM NAME | PART NUMBER | QUANTITY |
|---|---|---|
| BOLT-SOCKET,6X22 (Ref # 120) | 120CB0622 | 2 |
| LEVER-COMP,FRONT BRAKE (Ref # 13236) | 13236-0140 | 1 |
| PLATE (Ref # 13272) | 13272-0573 | 1 |
| SENSOR,FR WHEEL SPEED (Ref # 21176) | 21176-0804 | 1 |
| SWITCH,BRAKE (Ref # 27010) | 27010-0762 | 1 |
| CYLINDER-ASSY-MASTER,FR (Ref # 43015) | 43015-0606 | 1 |
| PISTON-COMP-BRAKE (Ref # 43020) | 43020-1095 | 1 |
| STOPPER-BRAKE,PISTON (Ref # 43022) | 43022-1010 | 1 |
| CAP-BRAKE (Ref # 43026) | 43026-0019 | 1 |
| PLATE-DIAPHRAGM (Ref # 43027) | 43027-0008 | 1 |
| DIAPHRAGM (Ref # 43028) | 43028-0015 | 1 |
| HOLDER-BRAKE,MASTER CYLINDER (Ref # 43034) | 43034-0049 | 1 |
| COVER-SEAL,MASTER CYLINDER (Ref # 49016) | 49016-1044 | 1 |
| BOLT,LEVER SET,BLACK (Ref # 92002) | 92002-1322 | 1 |
| BOLT,SCREW,4X12 (Ref # 92002A) | 92002-1323 | 1 |
| NUT,FLANGED,6MM (Ref # 92015) | 92015-1528 | 1 |
| BOLT,SOCKET,8X16 (Ref # 92153) | 92153-0327 | 1 |
| CLAMP,BRAKE HOSE (Ref # 92171) | 92171-1819 | 1 |
| SCREW,4X20 (Ref # 92172) | 92172-0320 | 2 |

© 2026 Kawasaki Motors Corp., U.S.A.