2019 VULCAN® S ABS CAFE

PARTS DIAGRAM

Front Fender(s)

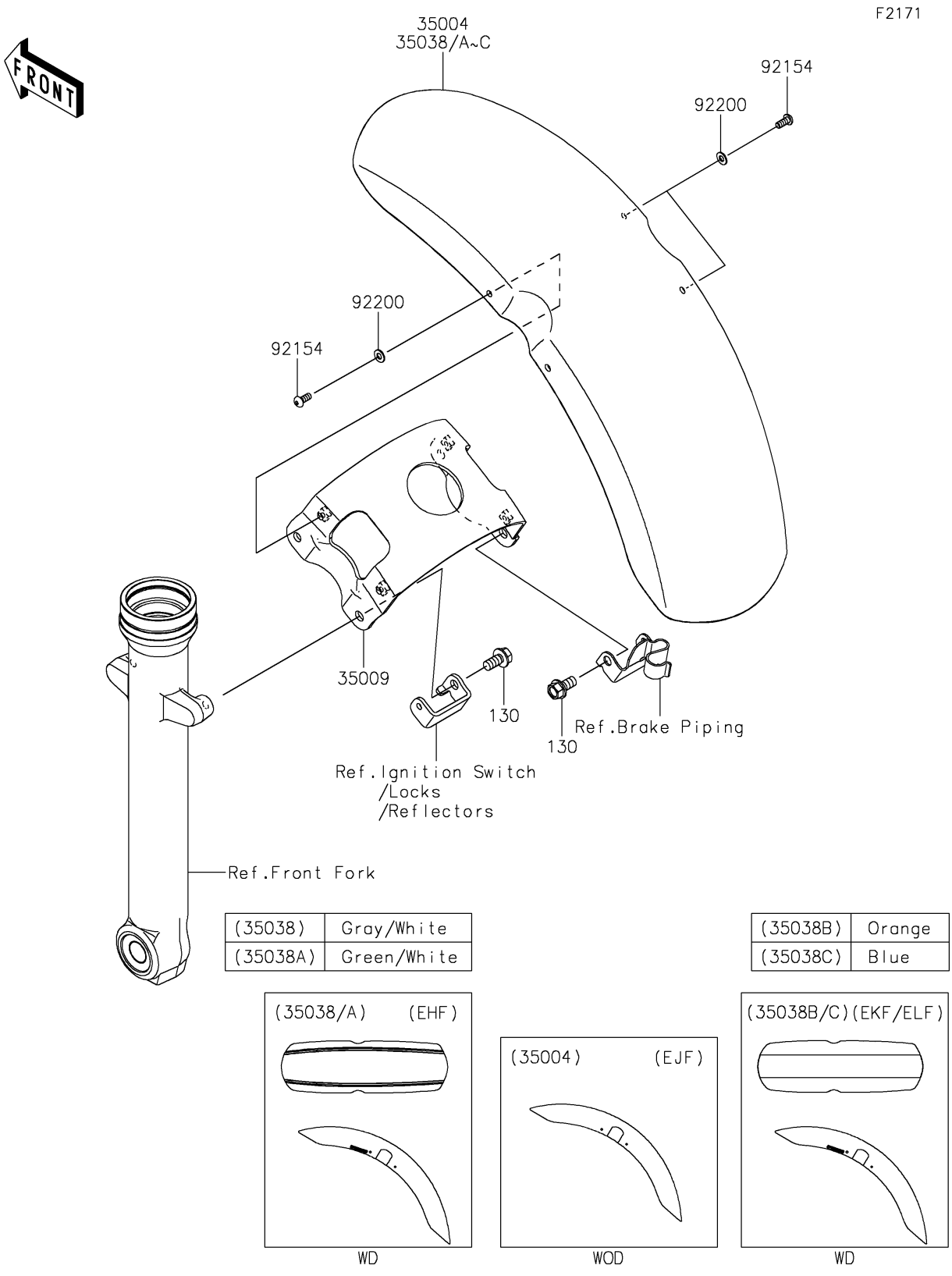

© 2026 Kawasaki Motors Corp., U.S.A.

2019 VULCAN® S ABS CAFE

PARTS LIST

Front Fender(s)

ITEM NAME	PART NUMBER	QUANTITY
BOLT-FLANGED,8X16 (Ref # 130)	130BA0816	4
BRACE (Ref # 35009)	35009-0039	1
FENDER-FRONT,C.S.F.ORANGE (Ref # 35038B)	35038-5064-62J	1
BOLT,SOCKET,5X12 (Ref # 92154)	92154-1471	4
WASHER,5.3X11X1 (Ref # 92200)	92200-0973	4

© 2026 Kawasaki Motors Corp., U.S.A.