2020 VULCAN® S ABS CAFE

PARTS DIAGRAM

Engine Mount

F2122

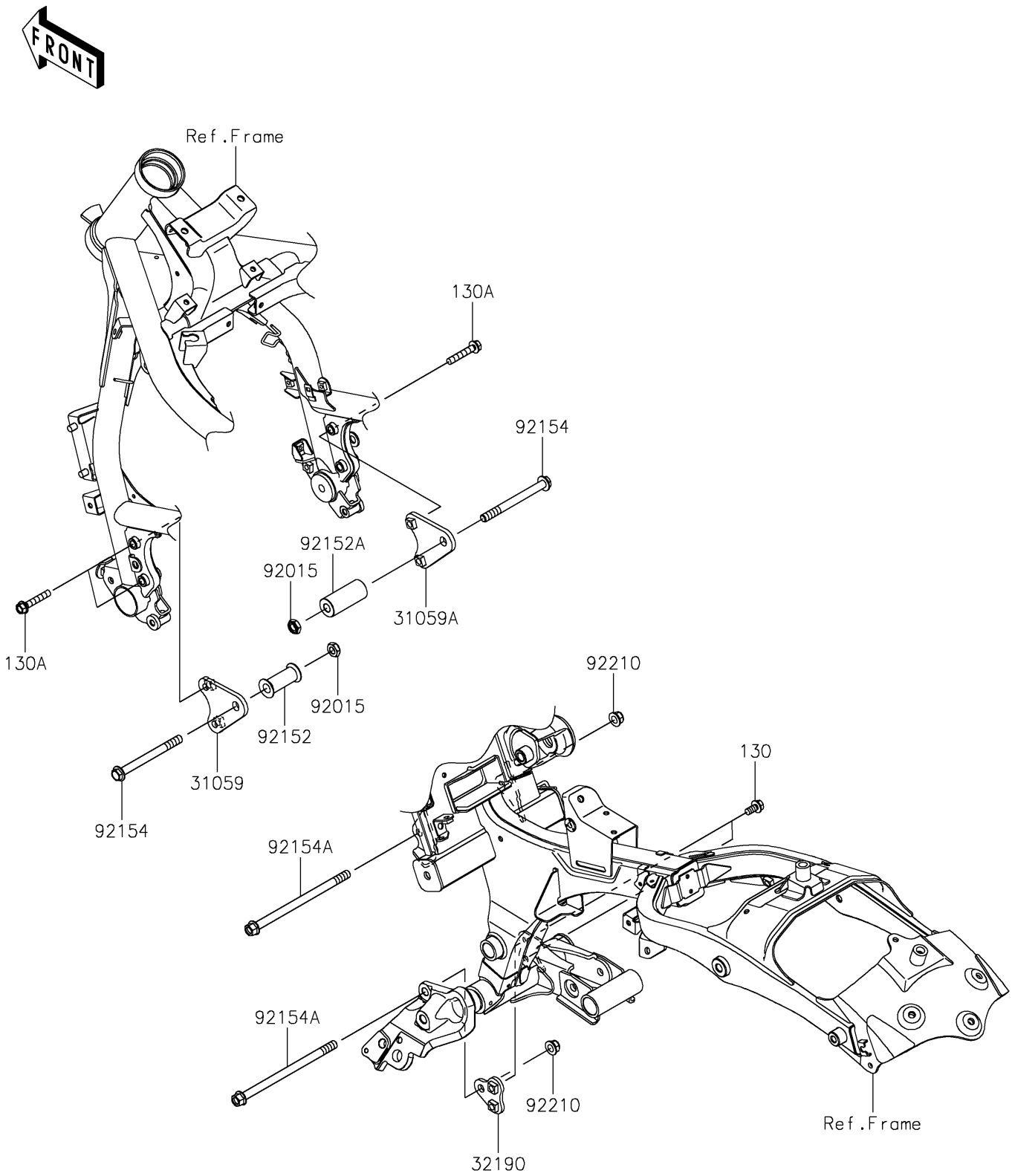

© 2026 Kawasaki Motors Corp., U.S.A.

2020 VULCAN® S ABS CAFE

PARTS LIST

Engine Mount

ITEM NAME	PART NUMBER	QUANTITY
BOLT-FLANGED,8X16 (Ref # 130)	130BA0816	2
BOLT-FLANGED,8X45 (Ref # 130A)	130BA0845	4
BRACKET-COMP-ENGINE,LH (Ref # 31059)	31059-0010	1
BRACKET-COMP-ENGINE,RH (Ref # 31059A)	31059-0011	1
BRACKET-ENGINE,RR,RH (Ref # 32190)	32190-0560	1
NUT,LOCK,10MM,BLACK (Ref # 92015)	92015-1188	2
COLLAR,11X26X50.8 (Ref # 92152)	92152-0963	1
COLLAR,11X26X60.7 (Ref # 92152A)	92152-1897	1
BOLT,FLANGED,10X110 (Ref # 92154)	92154-0716	2
BOLT,FLANGED,10X170 (Ref # 92154A)	92154-0840	2
NUT,LOCK,FLANGED,10MM (Ref # 92210)	92210-1081	2

© 2026 Kawasaki Motors Corp., U.S.A.