2019 VULCAN® S ABS CAFE

PARTS DIAGRAM

Generator

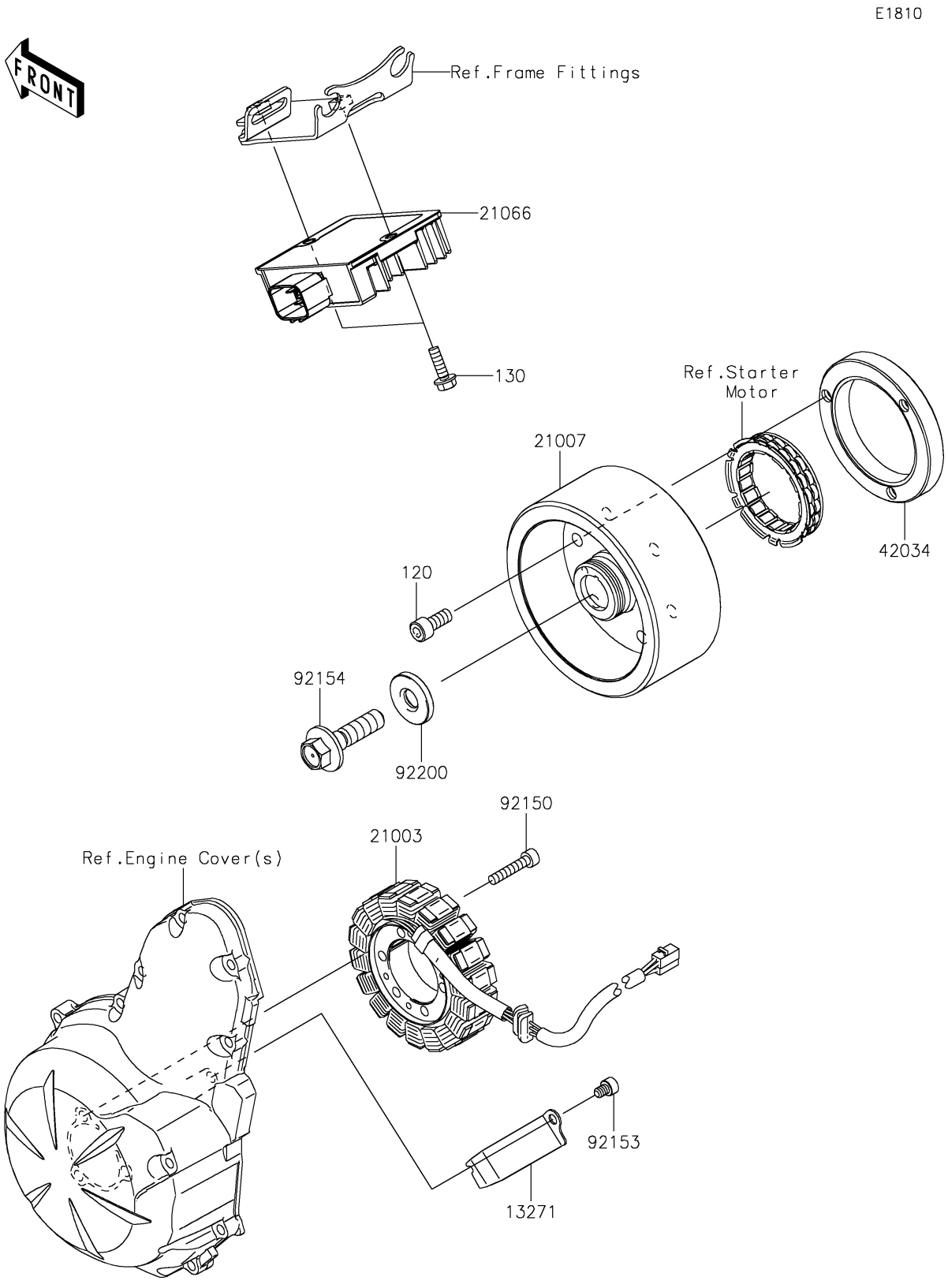

© 2026 Kawasaki Motors Corp., U.S.A.

2019 VULCAN® S ABS CAFE

PARTS LIST

Generator

ITEM NAME	PART NUMBER	QUANTITY

© 2026 Kawasaki Motors Corp., U.S.A.