2020 VULCAN® S ABS CAFE

PARTS DIAGRAM

Generator

E1810

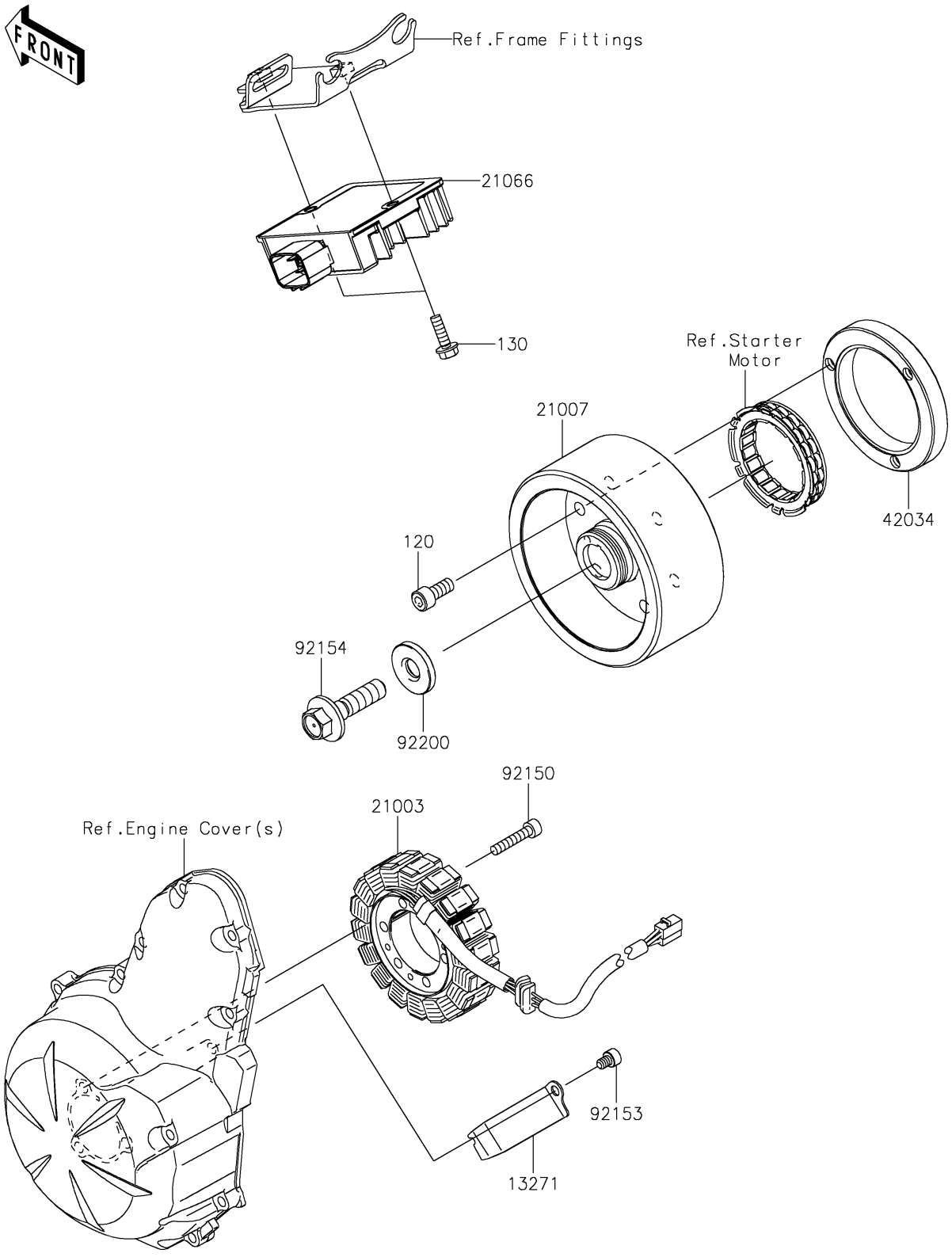

© 2026 Kawasaki Motors Corp., U.S.A.

2020 VULCAN® S ABS CAFE

PARTS LIST

Generator

ITEM NAME	PART NUMBER	QUANTITY
BOLT-SOCKET,8X18 (Ref # 120)	120CA0818	3
BOLT-FLANGED,6X20 (Ref # 130)	130BA0620	2
PLATE (Ref # 13271)	13271-0952	1
STATOR (Ref # 21003)	21003-0164	1
ROTOR (Ref # 21007)	21007-0601	1
REGULATOR-VOLTAGE (Ref # 21066)	21066-0750	1
COUPLING (Ref # 42034)	42034-1143	1
BOLT,SOCKET,6X30 (Ref # 92150)	92150-1433	3
BOLT,SOCKET,6X8 (Ref # 92153)	92153-1414	1
BOLT,FLANGED,12X45 (Ref # 92154)	92154-1812	1
WASHER,12X33X5 (Ref # 92200)	92200-0220	1

© 2026 Kawasaki Motors Corp., U.S.A.