2019 VULCAN® S ABS CAFE

PARTS DIAGRAM

Engine Cover(s)

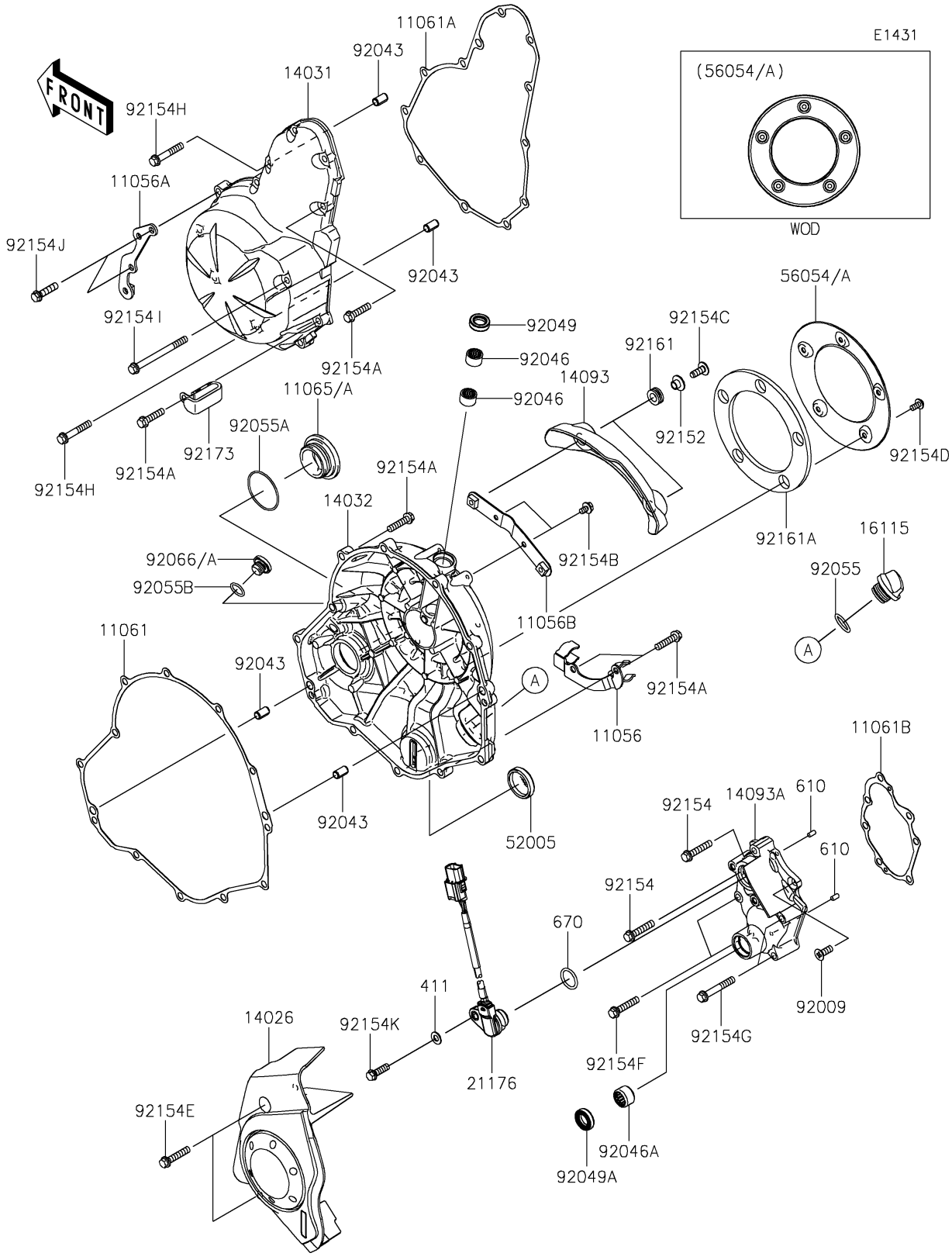

© 2026 Kawasaki Motors Corp., U.S.A.

2019 VULCAN® S ABS CAFE

PARTS LIST

Engine Cover(s)

ITEM NAME	PART NUMBER	QUANTITY
BRACKET,BRAKE HOSE,RR (Ref # 11056)	11056-4259	1
BRACKET,RESERVOIR (Ref # 11056A)	11056-4435	1
BRACKET,RELEASE COVER (Ref # 11056B)	11056-7318	1
GASKET,CLUTCH COVER (Ref # 11061)	11061-0164	1
GASKET,GENERATOR COVER (Ref # 11061A)	11061-0165	1
GASKET,TRANSMISSION COVER (Ref # 11061B)	11061-0166	1
CAP (Ref # 11065)	11065-0281	1
COVER-CHAIN (Ref # 14026)	14026-0129	1
COVER-GENERATOR (Ref # 14031)	14031-0599	1
COVER-CLUTCH (Ref # 14032)	14032-0591	1
COVER,CLUTCH RELEASE (Ref # 14093)	14093-0258	1
COVER,TRANSMISSION (Ref # 14093A)	14093-0463	1
CAP-OIL FILLER (Ref # 16115)	16115-1053	1
SENSOR,GEAR POSITION (Ref # 21176)	21176-0832	1
GAUGE,OIL LEVEL (Ref # 52005)	52005-0071	1
MARK,CLUTCH COVER,BLACK (Ref # 56054)	56054-1832-10	1
SCREW,6X16 (Ref # 92009)	92009-1360	1
PIN,6.2X8X14 (Ref # 92043)	92043-1263	4
BEARING-NEEDLE,HK1210FM (Ref # 92046)	92046-0034	2
BEARING-NEEDLE,HK1312 (Ref # 92046A)	92046-1148	1
SEAL-OIL,CLUTCH RELEASE (Ref # 92049)	92049-1475	1
SEAL-OIL,TC13225.5 (Ref # 92049A)	92049-1519	1
RING-O,19.8MM (Ref # 92055)	92055-0844	1
RING-O,39.4MM (Ref # 92055A)	92055-0849	1
RING-O,13.0X1.9 (Ref # 92055B)	92055-1011	1
PLUG,12X9.1 (Ref # 92066)	92066-0131	1
COLLAR,6.3X8.3X7.2 (Ref # 92152)	92152-1602	2
BOLT,FLANGED,6X30 (Ref # 92154)	92154-0727	2
BOLT,FLANGED,6X25 (Ref # 92154A)	92154-0819	19

© 2026 Kawasaki Motors Corp., U.S.A.

2019 VULCAN® S ABS CAFE

PARTS LIST

Engine Cover(s)

ITEM NAME	PART NUMBER	QUANTITY
BOLT,FLANGED,5X8 (Ref # 92154B)	92154-0964	2
BOLT,SOCKET,6X16 (Ref # 92154C)	92154-1678	2
BOLT,SOCKET,5X10 (Ref # 92154D)	92154-1691	5
BOLT,FLANGED,6X30 (Ref # 92154E)	92154-1772	2
BOLT,FLANGED,6X30 (Ref # 92154F)	92154-1773	2
BOLT,FLANGED,6X40 (Ref # 92154G)	92154-1774	2
BOLT,FLANGED,6X35 (Ref # 92154H)	92154-1779	2
BOLT,FLANGED,6X70 (Ref # 92154I)	92154-1780	1
WASHER-PLAIN,6MM (Ref # 411)	411AA0600	1
ROLLER,4X8 (Ref # 610)	610A0408	2
O RING,18MM (Ref # 670)	670D2018	1
BOLT,FLANGED,6X25 (Ref # 92154J)	92154-1785	2
BOLT,FLANGED,6X20 (Ref # 92154K)	92154-2130	1
DAMPER,8.3X16X6.4 (Ref # 92161)	92161-0664	2
DAMPER (Ref # 92161A)	92161-1767	1
CLAMP (Ref # 92173)	92173-0725	1

© 2026 Kawasaki Motors Corp., U.S.A.