# 2019 VULCAN® S ABS CAFE

## PARTS DIAGRAM

### Balancer

E1323




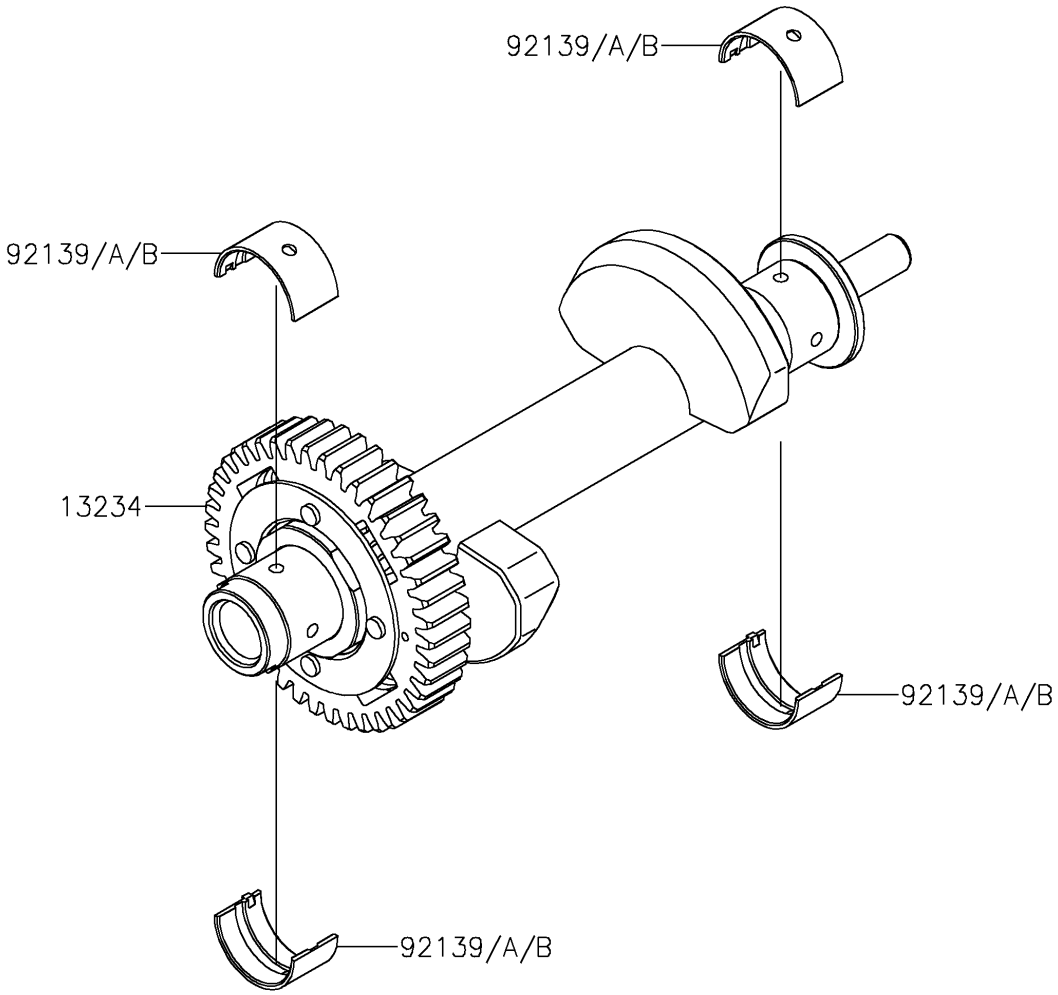


© 2026 Kawasaki Motors Corp., U.S.A.

# 2019 VULCAN® S ABS CAFE

## PARTS LIST

Balancer

| ITEM NAME | PART NUMBER | QUANTITY |
|---|---|---|

© 2026 Kawasaki Motors Corp., U.S.A.