2019 VULCAN® S ABS CAFE

PARTS DIAGRAM

Crankshaft

E1321

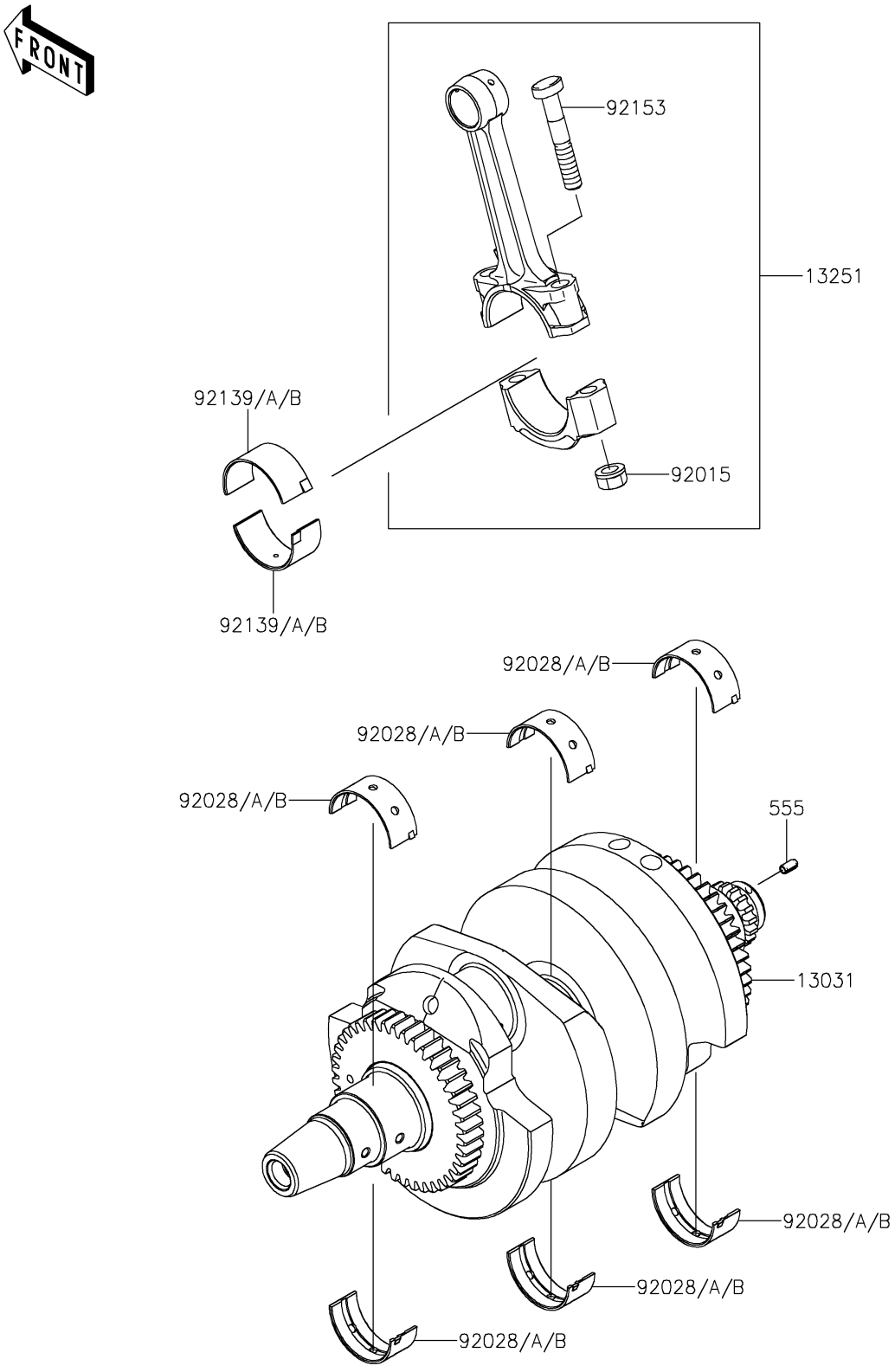

© 2026 Kawasaki Motors Corp., U.S.A.

2019 VULCAN® S ABS CAFE

PARTS LIST

Crankshaft

ITEM NAME	PART NUMBER	QUANTITY
CRANKSHAFT-COMP (Ref # 13031)	13031-0803	1
ROD-ASSY-CONNECTING,K (Ref # 13251)	13251-0010-KK	2
PIN-SPRING,4X8 (Ref # 555)	555A0408	1
NUT,FLANGED,8MM (Ref # 92015)	92015-1311	4
BUSHING,CRANKSHAFT,BLUE (Ref # 92028)	92028-1903	6
BUSHING,CRANKSHAFT,BLACK (Ref # 92028A)	92028-1904	AR
BUSHING,CRANKSHAFT,BROWN (Ref # 92028B)	92028-1905	AR
BUSHING,CON-ROD,BLUE (Ref # 92139)	92139-0114	4
BUSHING,CON-ROD,BLACK (Ref # 92139A)	92139-0115	AR
BUSHING,CON-ROD,BROWN (Ref # 92139B)	92139-0116	AR
BOLT,CON-ROD,8X49 (Ref # 92153)	92153-0957	4

© 2026 Kawasaki Motors Corp., U.S.A.