2020 VULCAN® S ABS CAFE

PARTS DIAGRAM

Muffler(s)

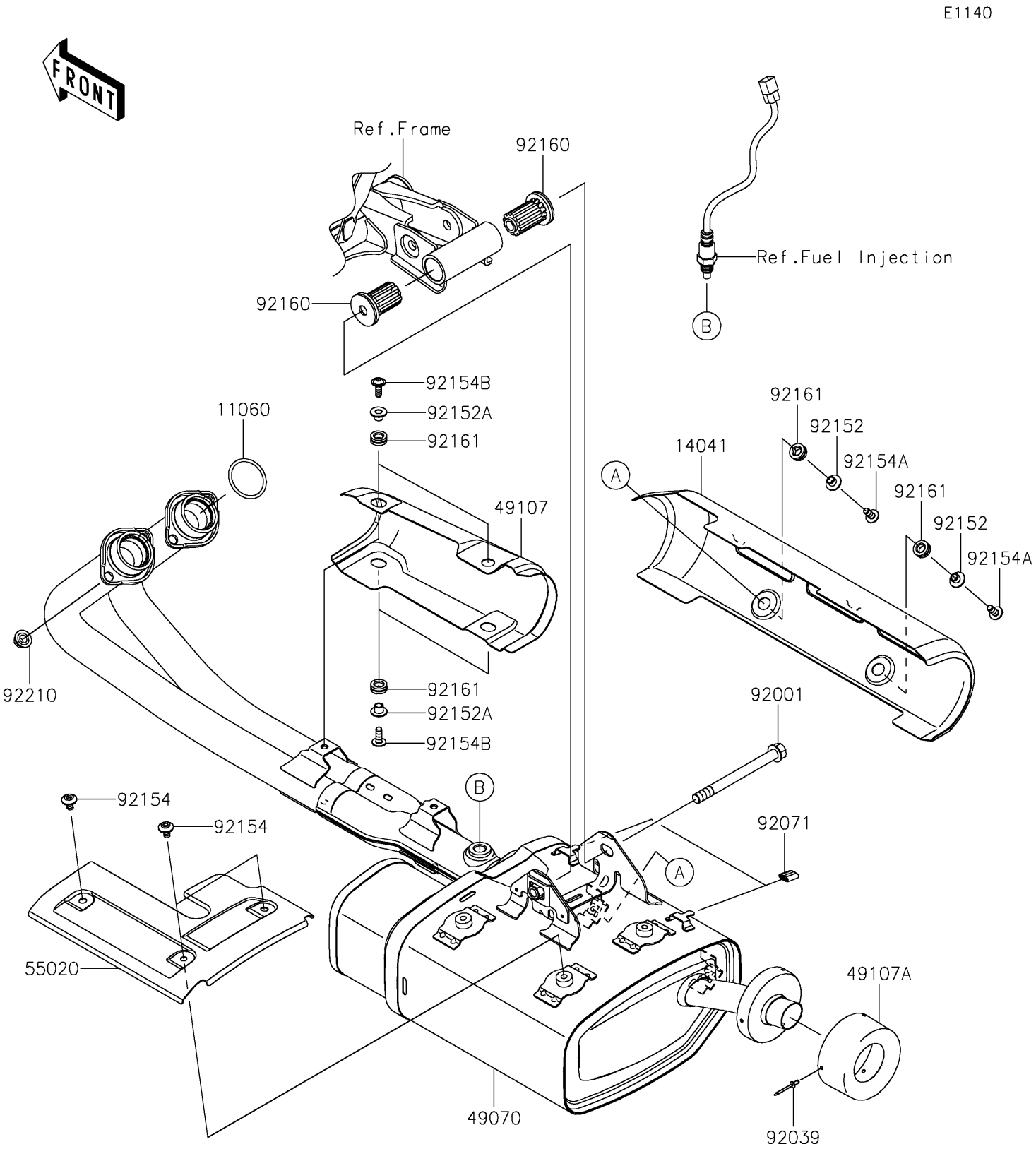

© 2026 Kawasaki Motors Corp., U.S.A.

2020 VULCAN® S ABS CAFE

PARTS LIST

Muffler(s)

ITEM NAME	PART NUMBER	QUANTITY
GASKET,EXHAUST PIPE HOLDER (Ref # 11060)	11060-1103	2
COVER-COMP,MUFFLER (Ref # 14041)	14041-0581	1
MUFFLER-COMP (Ref # 49070)	49070-0815	1
COVER-EXHAUST PIPE,FR (Ref # 49107)	49107-0776	1
COVER-EXHAUST PIPE,END (Ref # 49107A)	49107-0777	1
GUARD,MUFFLER (Ref # 55020)	55020-1855	1
BOLT,FLANGED,10X110 (Ref # 92001)	92001-1602	1
RIVET (Ref # 92039)	92039-0088	3
GROMMET (Ref # 92071)	92071-1270	2
COLLAR,6.3X8.3X7.2 (Ref # 92152)	92152-1602	2
COLLAR (Ref # 92152A)	92152-1988	4
BOLT,SOCKET,6X10 (Ref # 92154)	92154-0774	3
BOLT,SOCKET,6X14 (Ref # 92154A)	92154-0856	2
BOLT,SOCKET,6X16 (Ref # 92154B)	92154-1678	4
DAMPER (Ref # 92160)	92160-1423	2
DAMPER (Ref # 92161)	92161-1475	6
NUT,8MM (Ref # 92210)	92210-1114	4

© 2026 Kawasaki Motors Corp., U.S.A.