2020 NINJA® ZX™-14R ABS

PARTS DIAGRAM

Handlebar

F2310

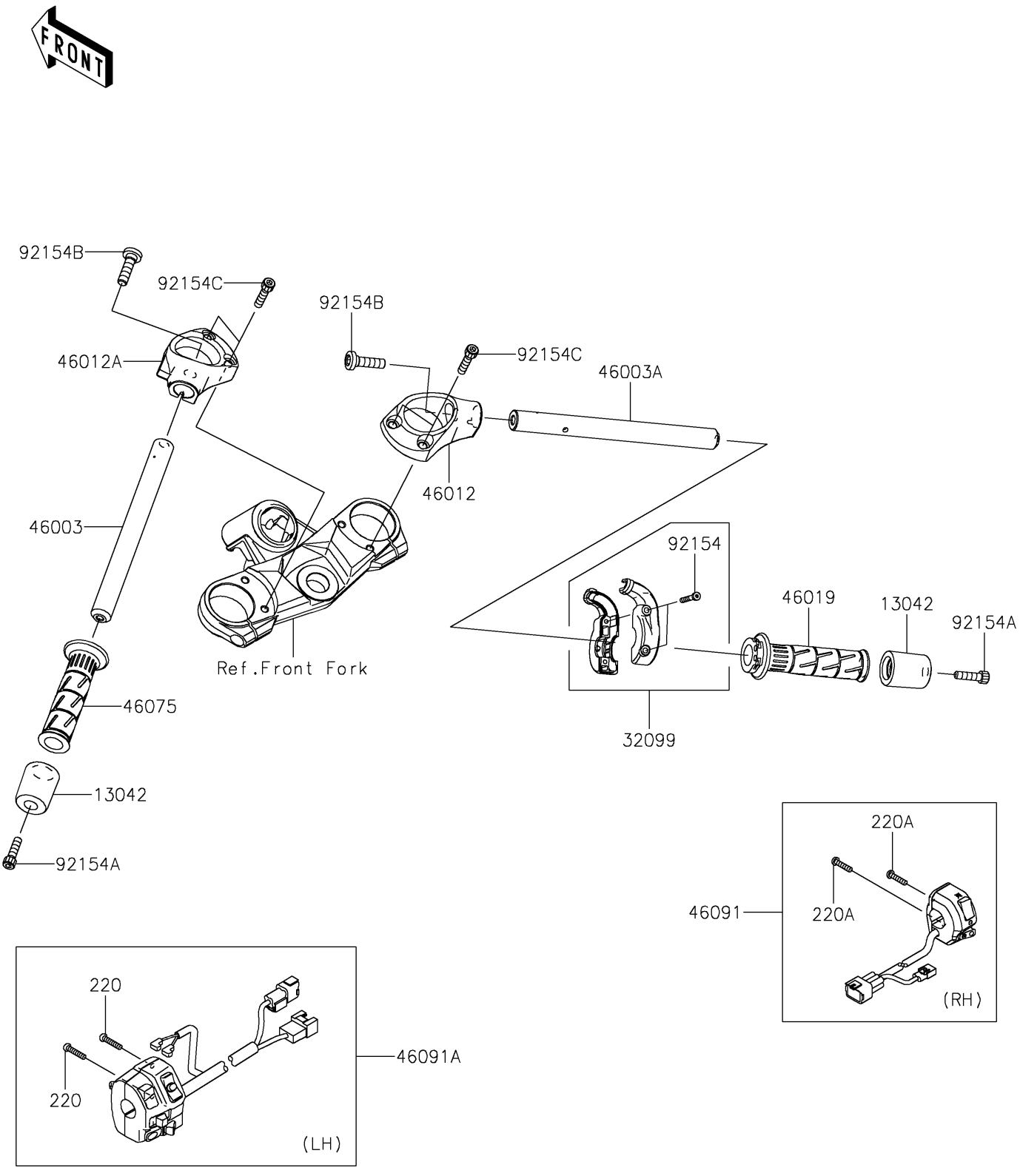

© 2026 Kawasaki Motors Corp., U.S.A.

2020 NINJA® ZX™-14R ABS

PARTS LIST

Handlebar

ITEM NAME	PART NUMBER	QUANTITY
WEIGHT,HANDLE (Ref # 13042)	13042-5006	2
SCREW-PAN-CROS,5X25 (Ref # 220)	220AB0525	2
SCREW-PAN-CROS,5X22 (Ref # 220A)	220C0522	2
CASE,THROTTLE (Ref # 32099)	32099-0766	1
HANDLE,LH (Ref # 46003)	46003-0564	1
HANDLE,RH (Ref # 46003A)	46003-0565	1
HOLDER-HANDLE,RH (Ref # 46012)	46012-0316	1
HOLDER-HANDLE,LH (Ref # 46012A)	46012-0317	1
GRIP-ASSY,THROTTLE (Ref # 46019)	46019-0001	1
GRIP,HANDLE,LH (Ref # 46075)	46075-1144	1
HOUSING-ASSY-CONTROL,RH (Ref # 46091)	46091-0321	1
HOUSING-ASSY-CONTROL,LH (Ref # 46091A)	46091-0331	1
BOLT,SOCKET,5X35 (Ref # 92154)	92154-1530	2
BOLT,SOCKET,8X30 (Ref # 92154A)	92154-1866	2
BOLT,SOCKET,10X37 (Ref # 92154B)	92154-2106	2
BOLT,SOCKET,8X35 (Ref # 92154C)	92154-2129	4

© 2026 Kawasaki Motors Corp., U.S.A.